# Directions for use

To give to the user

EN

This guide is available in digital format at:
www.stuv.com
Find us also on:

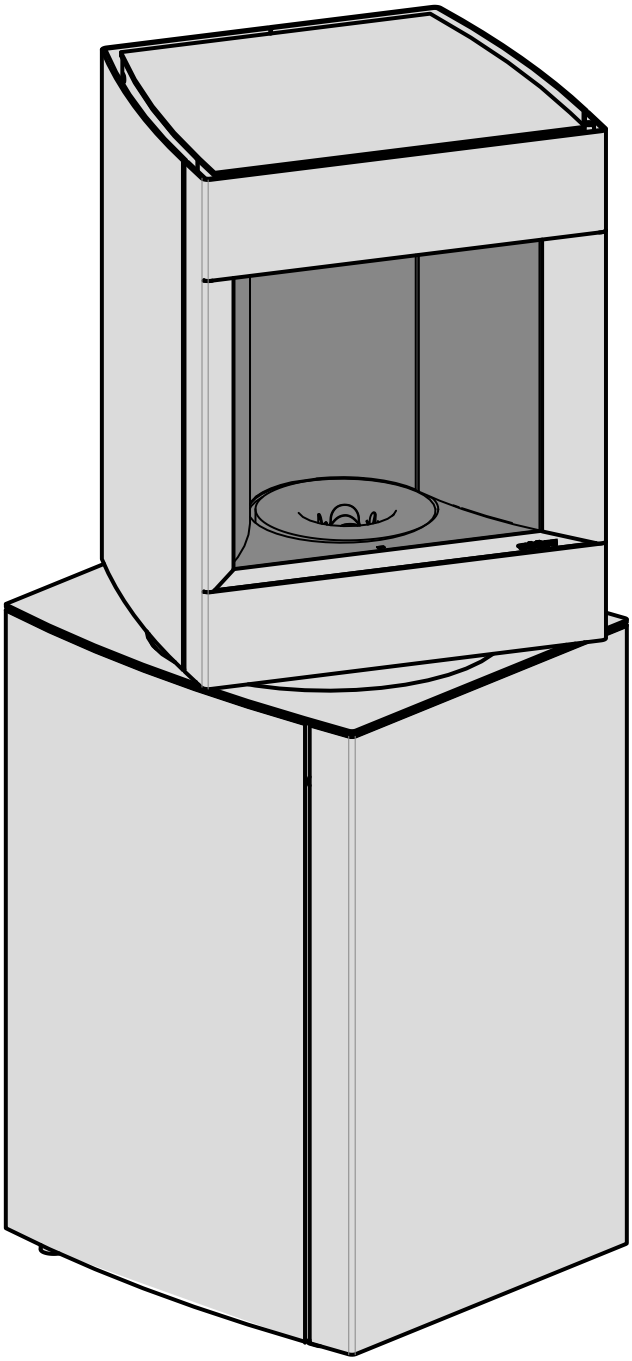

stûv P-10.3

November 2025
SN 242026 > ...
APF 137

# WELCOME TO THE WORLD OF STÛV!

You have just opted for an eco-friendly, high-performance heating system.

We hope that you enjoy using it from this moment on.
You will find advice and instructions for the use and maintenance of your Stûv in this document.

# CONTENTS


**PRESENTATION OF THE PRODUCT** **6**

Standards, certification and technical characteristics 6

Ecodesign technical parameters 8

Stûv P-10 marking 9

Materials and main components 10

Recommendations for dismantling, recycling and disposal of the appliance at the end of its life cycle 10

Legal terms of use 10

Dimensions 11

Overview of the stove components 12

How does your Stûv P10 work? 13

Fuel 14

**USE** **15**

General recommendations 15

safety distance to combustible materials 15

Recommendations before first use 16

Initial cautions 16

Basic usage 17

Stûv P10.3 control interfaces 18

**MAINTENANCE** **33**

Daily maintenance 33

Weekly maintenance 34

Annual maintenance 37

**IN CASE OF PROBLEMS...** **39**

Emergency switch 39

Alarm signals 40

**THE EXTENSION OF THE STÛV GUARANTEE** **48**

**DECLARATION OF PERFORMANCE (EU 305-2011)** **50**

**EU DECLARATION OF CONFORMITY** **51**

**CONTACTS** **52**

## Standards, certification and technical characteristics

The Stûv P-10 stove (for intermittent operation) comply with the requirements of EN European Standards (in terms of efficiency, gas emissions, safety etc…) **EN16510-1 & EN16510-2-6:2022**.

Data provided in this notice are supplied by a certified laboratory.

Stûv P-10s are covered by:
patents nos.:
EP 2304319
JP 5390603
US 8.904.944
US 8.826.899
+ Patents pending

model drawing nos.:
DM/72417
DM/72418
002500942-0001
002500942-0002

**Results of tests according to EN16510-2-6:2022 standards:**
Domestic wood pellet convection heating appliances

**Stûv P-10.3**

| | |
|---|---|
| System mass | 175 kg |

**Calculation data for ducts according to EN13384-1**

| | Minimum power | Maximum power |
|---|---|---|
| CO emissions | 0,011 % | 0,002 % |
| Heat output | 3,7 kw | 8,1 kw |
| Performance | 91,6 % | 92,0 % |
| Average smoke temperature | 122°C | 184°C |
| Weight-flow ratio of smokes | 4,0 g/s | 4,9 g/s |
| Recommended draught | 3 Pa | 6 Pa |
| Minimum draught at the output of the appliance for flue calculation | 0 Pa | 0 Pa |

**Requirements relating to the electrical power supply**

| | |
|---|---|
| Voltage | 230 V |
| Frequency | 50 Hz |
| Electric power consumption on ignition | 1000 W |
| Electrical power consumption under normal operation | 40 W |

**Requirements relating to fuel**

| | |
|---|---|
| Recommended fuel | Granulés de bois exclusivement |
| Certification | Din plus, EN plus A1, NF biocombustibles HP |
| Diameter | 6 mm |

**Air supply requirements**

| | |
|---|---|
| Minimum diameter of the air supply duct | 60 mm |
| Maximum length of air supply duct | 5 m |
| Maximum number of 90° bends | 4 |
| Minimum cross-section of combustion air supply from outside (when the fireplace is not connected directly to the outside air) | 30 cm² |

**In all cases, your installation must comply with standards EN 15287-1 or -2 and their appendices. Consequently, your smoke flue must comply with standard EN 13384 -1 and its appendix.**

# ECODESIGN TECHNICAL PARAMETERS FOR DECENTRALISED SOLID FUEL HEATERS

according to commission (EU) 2015/1185 and 2015/1186 and Ecodesign regulations

## Details of the device:

| | | | |
|---|---|---|---|
| Model reference(s) : | STÛV P10.3 | Notified body/ Body number : | ACTECO / 1880 |
| Equivalent(s) model(s) : | - | Test report number : | 1880-AoP-012-22 |
| Indirect heating functionality : | no | Application of harmonised standards : | EN16510-1 & EN16510-2-6:2022 |
| Direct thermal power : | 8,1 kW | Other standards applied / technical specifications: | - |
| Indirect thermal power : | 0,0 kW | | |

## Details of the reference fuel (only one) :

| Fuel | Reference fuel (only one): | Other eligible fuel (s): | Seasonal space heating energy efficiency $\eta_s$ [x %]: | Emissions from space heating at rated thermal output (*) : | | | | Emissions from space heating at minimum heat output (*) (**) : | | | |
|---|---|---|---|---|---|---|---|---|---|---|---|
| | | | | PM | OGC | CO | $NO_x$ | PM | OGC | CO | $NO_x$ |
| | | | | [x] mg/Nm³ (13 % $O_2$) | | | | [x] mg/Nm³ (13 % $O_2$) | | | |
| Wood logs with a moisture content ≤ 25% | no | no | N.A. | N.A. | N.A. | N.A. | N.A. | N.A. | N.A. | N.A. | N.A. |
| Compressed wood with a moisture content of < 12% | yes | no | 89,0 | 12 | <1 | 20 | 79 | 4 | 3 | 137 | 58 |
| Any other fuel | no | no | N.A. | N.A. | N.A. | N.A. | N.A. | N.A. | N.A. | N.A. | N.A. |

(*) P = particulate matter, OGCs = organic gaseous compounds, CO = carbon monoxide, NOx = nitrogen oxides.
(**) Only required if correction factors F(2) or F(3) are applied

## Characteristics when operating with the reference fuel (only one) :

| Characteristics | Symbol | Value | Unit |
|---|---|---|---|
| **Heating output** | | | |
| Thermal output | $P_{nom}$ | 8.1 | kW |
| Minimum thermal output | $P_{min}$ | 3.7 | kW |
| **Auxiliary power consumption** | | | |
| At nominal heat output | $el_{max}$ | 0.028 | kW |
| At minimum heat output | $el_{min}$ | 0.025 | kW |
| In standby mode | $el_{SB}$ | 0.004 | kW |
| **Permanent pilot flame power requirement** | | | |
| Pilot flame power requirement (if applicable) | $P_{pilot}$ | N.A. | kW |
| **Energy efficiency** | | | |
| Energy efficiency index | - | 130 | - |
| Energy efficiency class | - | A++ | - |

| Characteristics | Symbol | Value | Unit |
|---|---|---|---|
| **Useful efficiency (NCV as received)** | | | |
| Useful efficiency at nominal heat output | $\eta_{th,nom}$ | 92,0 | % |
| Useful efficiency at minimum heat output (indicative) | $\eta_{th,min}$ | 91,6 | % |
| **Type of heat output/room temperature control (select only one)** | | | |
| Single stage heat output control, no room temperature control | | | no |
| Two or more manual stages, no room temperature control | | | no |
| With mechanic thermostat room temperature control | | | no |
| With electronic room temperature control | | | no |
| With electronic room temperature control plus day timer | | | no |
| With electronic room temperature control plus week timer | | | yes |
| **Other control options (multiple selections possible)** | | | |
| Room temperature control, with presence detection | | | no |
| Room temperature control, with open window detection | | | no |
| With distance control option | | | yes |

## Special precautions for assembly, installation or maintenance :

Fire protection and safety distances, such as distances to combustible building materials, must be observed! An adequate supply of combustion air to the appliance must be guaranteed at all times. The flue gas values of the appliance must be observed when dimensioning the chimney!

| | |
|---|---|
| Fabricant | STÛV SA |
| Contact | Thomas Duquesne<br>Science & Technology Manager<br>certifications@stuv.be |
| Address | Rue Jules Borbouse,4<br>5170 Bois-de-Villers<br>Belgique |

Gérard Pitance
Administrateur délégué et Fondateur

Jean-François Sidler
Directeur Général et Administrateur délégué

# Stûv P-10 marking

| | |
|---|---|
| CE | **Intended use :** Pellet stove for space heating in residential buildings. Please read and follow the user instructions before starting! **Only use recommended fuels :** Wood pellets diameter 6 mm, quality standard EN+A1 |
| 15<br>Stûv S.A. Rue Jules Borbouse 4, 5170 Bois-de-villers<br>**STÛV P10.3** | European Standards: EN 16510-1 & EN 16510-2-6:2022<br>Notified body identification number: 1880<br>Declaration of performance reference number : QA231478502 |

| **Hygiene, health and environment** | | **Nominal output** | **Part load output** |
|---|---|---|---|
| Emissions at 13% d'oxygène | **CO** | 20 mg/Nm³ | 137 mg/Nm³ |
| | **NOx** | 79 mg/Nm³ | 58 mg/Nm³ |
| | **OGC** | <1 mg/Nm³ | 3 mg/Nm³ |
| | **PM** | 12 mg/Nm³ | 4 mg/Nm³ |

| **Fire safety** | | Total distance | Convection air space | Insulation (Thermal conduct. of 0.105 W/m.K at 400°C) |
|---|---|---|---|---|
| Rear | **dR** | 200 mm | 200 mm | - |
| Sides | **dS** | 150 mm | 150 mm | - |
| Ceiling | **dC** | 500 mm | 500 mm | - |
| Bottom | **dB** | 0mm | 0mm | - |
| Front (e.g. furniture) | **dP** | 1000 mm | 1000 mm | - |
| Floor in front | **dF** | 0mm | 0mm | - |
| Side radiation | **dL** | 1000 mm | 1000 mm | - |

| **Safety and accessibility in use** | **Nominal output** | **Part load output** |
|---|---|---|
| Flue gas outlet temperature | 185 °C | 123 °C |
| Minimum flue draught | 12 Pa | 7 Pa |
| Flue gas mass flow | 4,9 g/s | 4,0 g/s |
| Fire safety of installation to the chimney | | T 400 G |

| **Energy economy and heat retention** | Nominal output | Part load output |
|---|---|---|
| Space heat output | 8.1 kW | 3.7 kW |
| Water heat output | n.a. | n.a. |
| Efficiency | 92.0 % | 91.6 % |
| Saisonal space heating efficiency at Nom. output | 89.0 % | |
| Energy-Efficiency Index (EEI) | 130 | |
| Energy-Efficiency class | A++ | |
| Electric power consumption | 0,028 kW | 0,025 kW |
| Power consumption in standby mode | 0,004 kW | |
| Electric power (peak) | 0,966 kW | |
| Electric power (average) | 0,028 kW | |
| Voltage | 230 V | |
| Frequency | 50 Hz | |
| Product type | B | |
| **Mechanical resistance and stability** | | |
| Load bearing capacity | NPD | |

## Minimum clearance distance from combustible materials

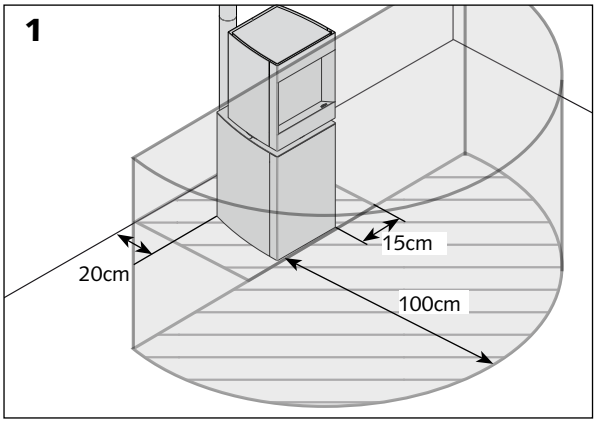


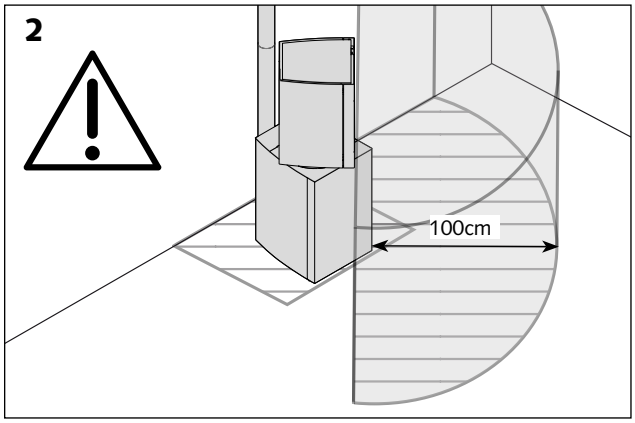


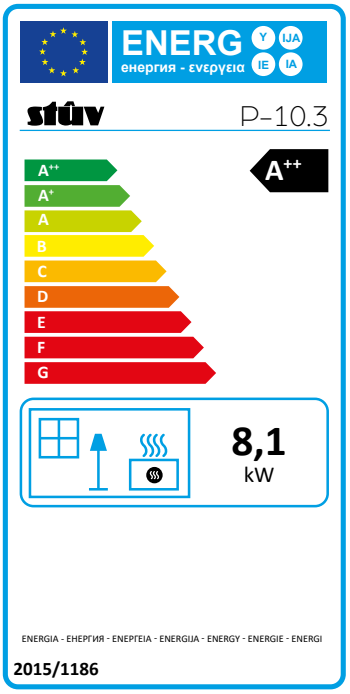


**Product data sheet**
EU 2015/1186

stûv

**Stûv s.a.**
Rue Jules Borbouse,4
5170 Bois-de-Villers
info@stuv.com – www.stuv.com

Model reference:
**STÛV P10.3**

| | |
|---|---|
| Energy efficiency class | A++ (A++ – G) |
| Direct thermal power | **8,1 kW** |
| Indirect thermal power | **-** |
| Energy efficiency rating | **130** |
| Output at rated termal input | **92.0 %** |
| Output at minimum capacity | **91,6 %** |

Special precautions that must be taken during assembly, installation or maintenance of the decentralised heating device:

**Consult the installation, usage and maintenance instructions**

## Materials and main components

The Stûv P-10 consists mainly of:

> Painted steel sheets/tubes for structural and facing elements

> The bottom facings are available in a oak-veneered wood panel finish (light or dark)

> Vermiculite for the inside of the combustion chamber

> Cast steel for the structural elements of the burner

> Aluminium for the smoke extraction flue

> HDPE for the Pellet hopper

> Remote control with PP body and PC screen, lithium-ion battery.

> A trim finishing kit is available to trim the bottom facings. In this case, the installer should check that the material chosen corresponds to the use for which it is intended.

**All of these components are deemed to be compliant within tolerances and national practices.**

## Recommendations for dismantling, recycling and disposal of the appliance at the end of its life cycle

Stûv has a determinedly proactive responsible environmental apprach. We think about the end-of-life of our products.

Each of the device's components can be isolated so that sorting can be carried out and therefore optimum recycling.

Removal of the various parts must be done in accordance with local and national regulations.

## Legal terms of use

**⚠This appliance must not be used by children under 8 years of age.**

**⚠ This appliance may only be used by persons with reduced physical, sensory or mental capabilities if they are supervised or trained in the safe use of the appliance.**

**⚠ Cleaning and maintenance by the user must not be carried out by unsupervised children.**

**⚠ Children must not play with the appliance! Some parts of the fireplace - the glass and the outer walls - can be very hot even in normal use (rated power) and the radiation from the glass can be high.**

## Dimensions

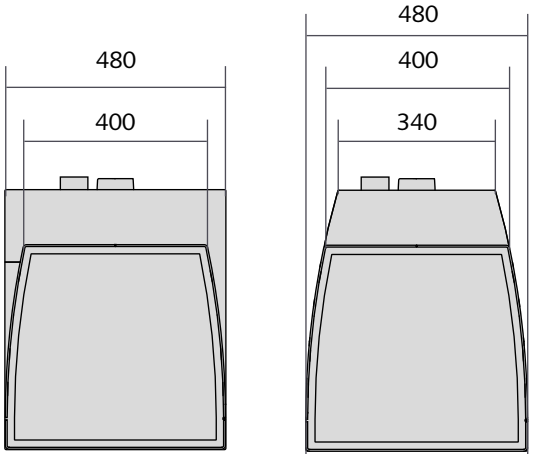


wood and “to be trimmed” version

sheet metal version

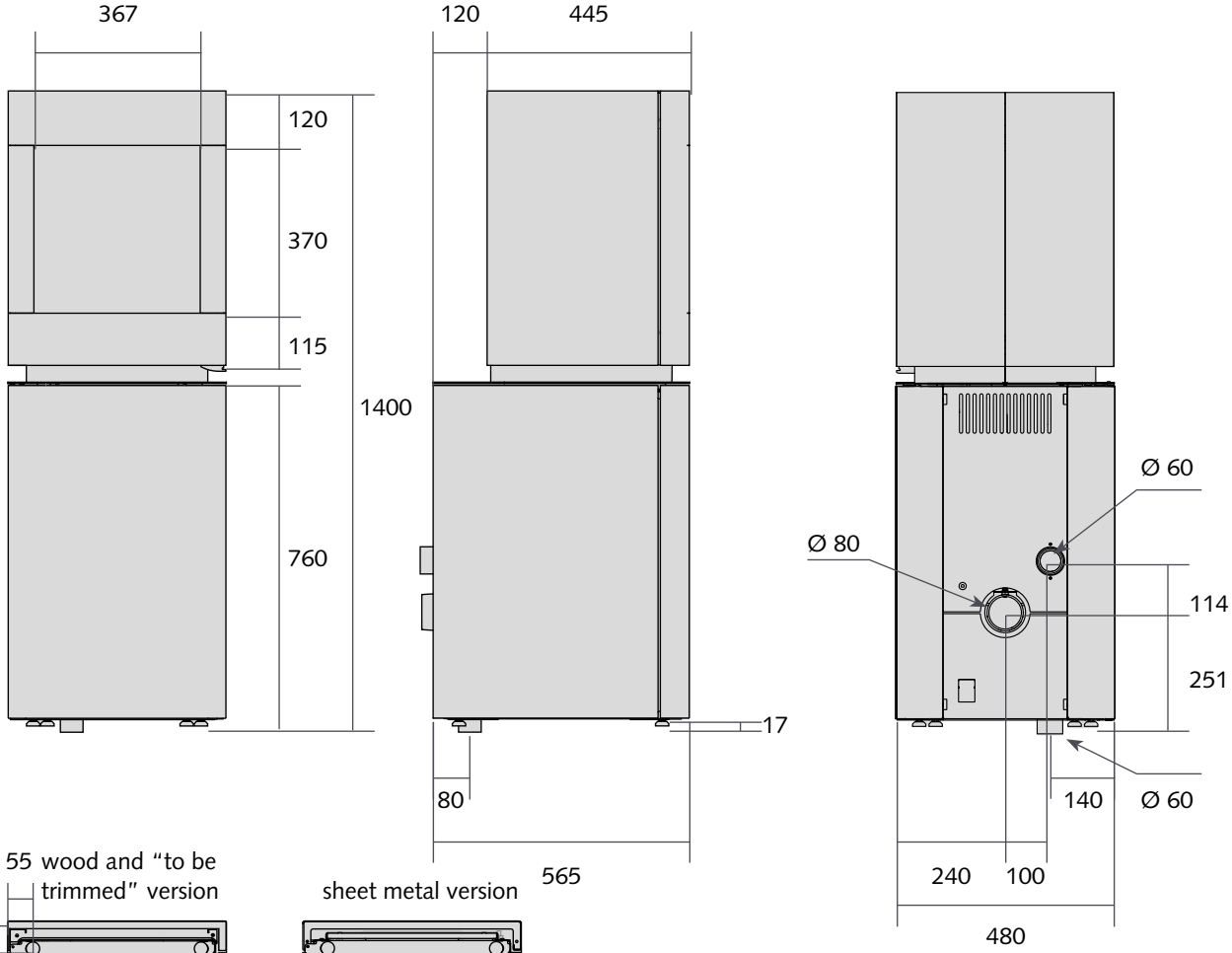


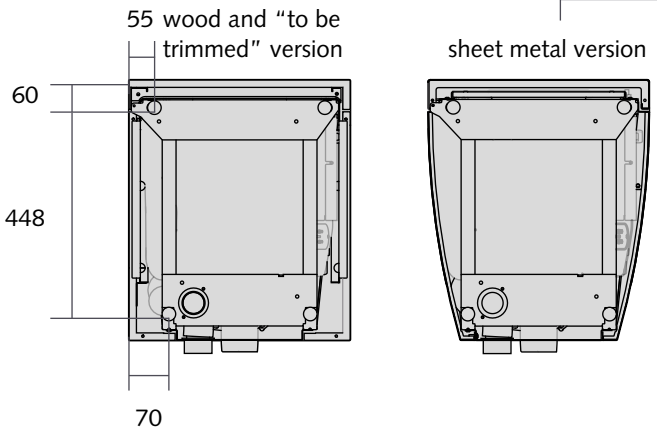


wood and “to be trimmed” version

sheet metal version

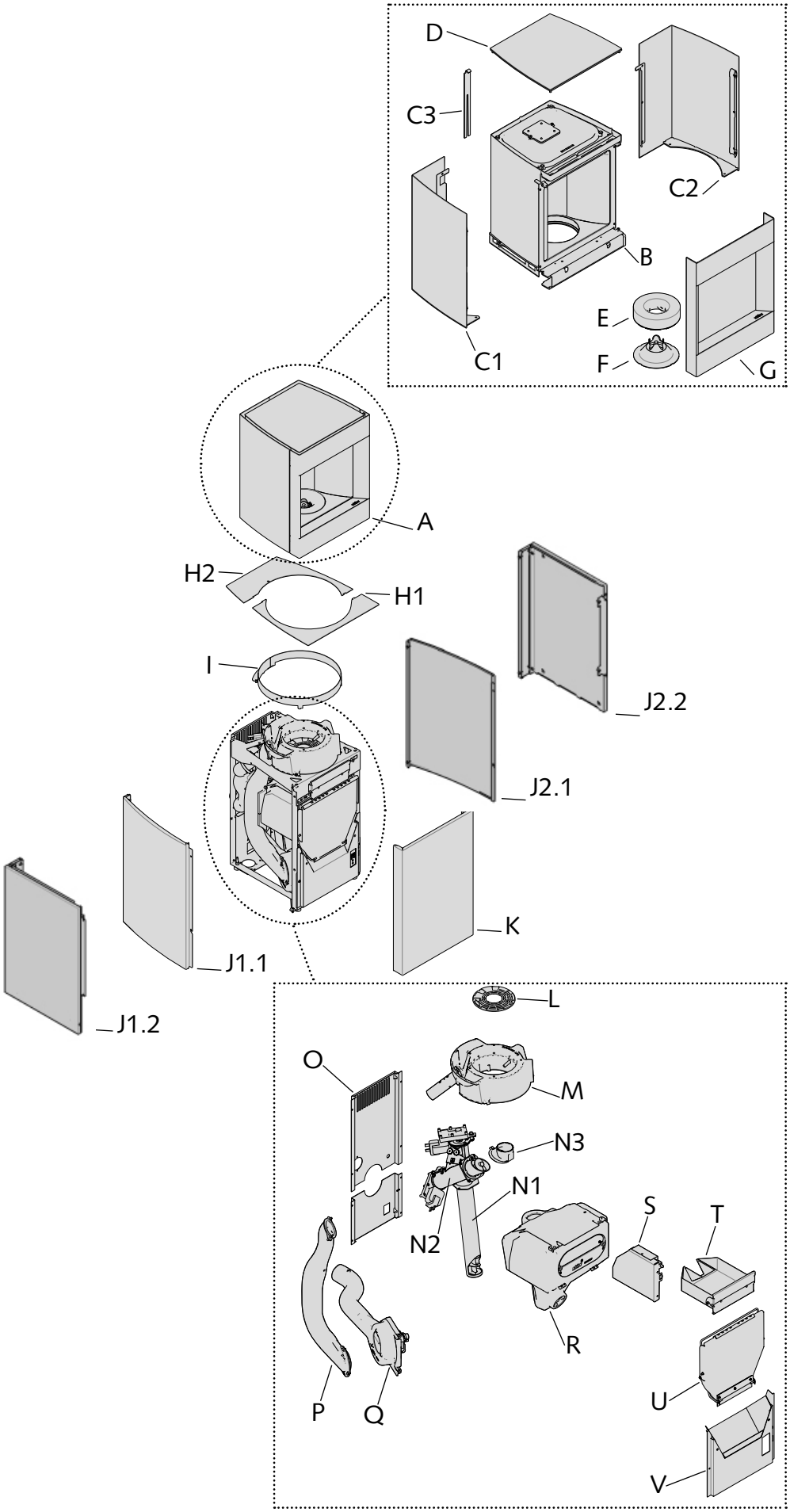


A. Lantern

B. Lantern frame

C1. Right-hand lantern facing
C2. Left-hand lantern facing
C3.Trim alignment key

D. Top shelf

E. Vermiculite Ring

F. Flame modeller

G. Lantern door

H.
H1. Rear shelf
H2. Front shelf

I. Collar

J.
J.1.1 Left facing (metal panel version)
J.1.2 Left facing (wood and to be trimmed version)
J.2.1 Right facing (metal panel version)

J.2.2 Right facing (wood and to be trimmed version)

K. Bottom door

L. Grilles

M. Burner casting

N1. Archimedes screw 1
N2. Archimedes screw 2
N3. Burner feed elbow

O. Rear panels

P. Smoke flue

Q. Fan body

R. Pellet hopper

S. Electronic card

T. Ashpan

U. Reloading hatch

V. Front hood with dust channel

*Facings are available in two versions. The illustration shows one side of each finish.

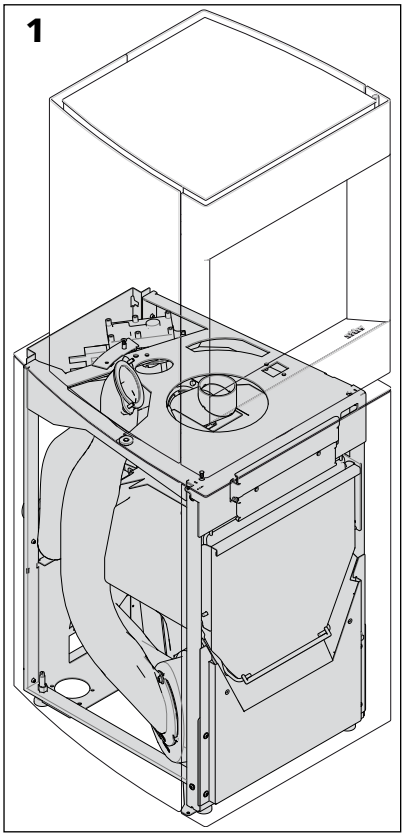


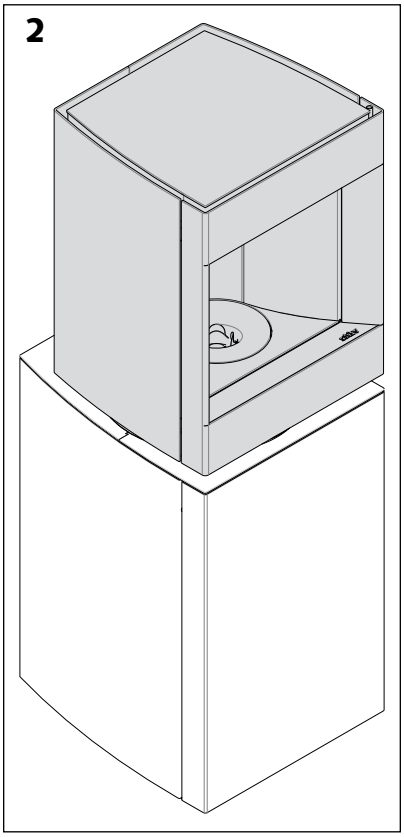


The Stûv P-10 is a wood pellet stove consisting of two major parts:

- A base containing the pellet hopper, the fuel and combustion feed, smoke extraction and all the electronics and sensors enabling the operation of the appliance to be adjusted and set [diagram 1].

- A pivoting lantern where the burning of the pellets takes place. This top part also radiates and diffuses convection heat; it is fitted with a window which gives a view of a beautiful large flame [diagram 2].

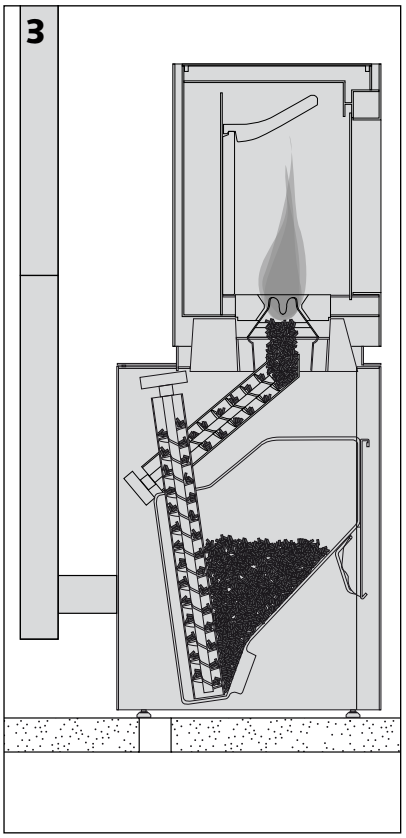


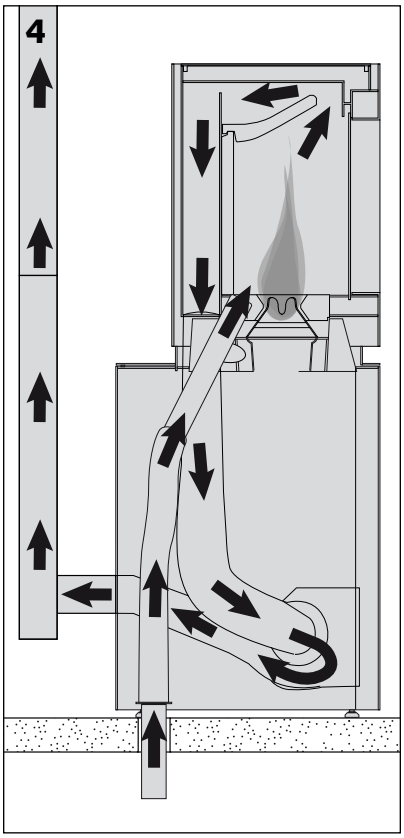


The device has an electronic management system operating on two variables to provide optimal thermal comfort. Depending on the user's requirements, the Stûv P-10 will adjust its output and maintain this by adjusting:

- The quantity of pellets burned [diagram 3]

- The quantity of air supplied to combustion [diagram 4]

## What are wood pellets?

Wood pellets are a solid and eco-friendly fuel made from sawmill waste. Sawdust is compressed without glue or binder so as to obtain a standardised cylinder with a high density and low moisture. These characteristics give the granules significant calorific power.

## Which pellet should I choose?

The Stûv P10's performance may vary depending on the pellets used.
For correct use, the pellets must comply with ENplus or DINplus A1 or NF high performance certifications. These references ensure that the pellets have the following features:

- composition: 80-100% resinous wood
- diameter: 6 mm
- Min-max length: 3 - 40 mm
- humidity level: ≤ 10%
- ash level: ≤ 7%

**Burning any liquid or solid other than pellets that comply with the ENplus/DINplusA1/NF high performance standard is prohibited!**

### The consequences of burning inappropriate pellets

Burning pellets that do not fulfil the above-mentioned criteria can result in device malfunctions such as:

- damage to the glass and smoke ducts
- noise
- burner getting clogged up
- build up of dust in the hopper
- etc.

If you notice one or more of these when using your device, we recommend changing the pellets you are using.

## Pellet storage

Pellets must be stored in a dry place where the temperature is above 5 °C.
They can be stored in bags or in bulk but avoid storage in the open air.

Caution!
Take care not to crush the bags to avoid producing too much dust. Avoid emptying dust into the machine's hopper as this sawdust can disrupt the feed system.

If you use pellets stored in a bag, after opening the bag, use the contents within a relatively short time. Otherwise there is a risk of the pellets getting damp.

**Every Stův P-10 is subjected to a factory check.**
**There may be traces of combustion or light residues after this test.**

## General recommendations

### ⚠ Important!

**In order to best use the qualities of your appliance and avoid any danger, the following instructions must be followed:**

**> Install the stove according to industry best practice and local or national regulations. A qualified professional will ensure compatibility of the flue.**

**> Read these instructions carefully and keep them.**

**> Observe the instructions for maintenance.**

**> Never use the appliance with the door open or a broken window.**

**> Never use inflammable liquid in or around the appliance when it is operating.**

**> Only use pellets of the recommended quality (DINplus or ENplus A1).**

**> Avoid any accumulation of unburned pellets in the burner.**

**> Never load the fuel elsewhere than in the hopper.**

**> Dispose of ash before each use and empty the ashpan regularly (p.14).**

**> Please return the warranty registration card (found at the end of this document), duly completed.**

### Use

The stove should be used in accordance with local and national regulations and European standards.

Some parts of the stove – the glass door and the outside walls – may become very hot even during normal usage (rated power) and significant heat may be radiated from the glass door.

In order to prevent any damage or risk of fire, when the stove is in use, remove all heat-sensitive objects from the radiation area. Take particular care when you leave the room.

Ensure that the glazed part is not facing any materials that are heat-sensitive.

Do not leave young children without supervision in the room where the stove is installed.

Ensure the air inlets and outlets are always kept clear.

### Caution!

The appliance is not designed to be used with cooking utensils. Do not place anything on the appliance or on the facings.

### Repairs / Maintenance

Any modification carried out to the system may cause danger and will invalidate your guarantee. Only use Stův spare parts in the case of repairs.

### Should a fire in the flue get out of control

Do not open the stove's door during the initial period.

Disconnect the device.

Call the fire brigade.

If the fire has not died down after a few minutes, use a dry powder, soda acid or sand extinguisher (never water).

After a chimney fire, ventilate the room where the stove is situated.

Have the chimney cleaned and inspected by a professional. Have repairs carried out if necessary.

## safety distance to combustible materials

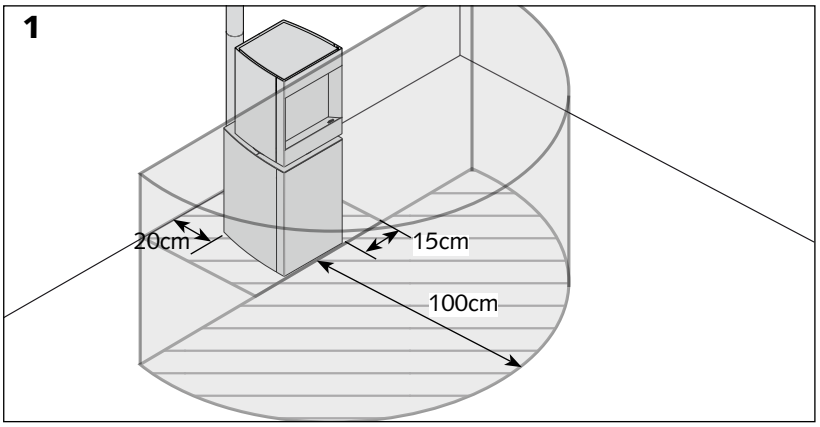


The heat radiated from the glass door and the walls may be significant.

Whichever way the stove is pointing, observe the safety distances with regard to combustible materials [diagram 1], or ensure that the materials exposed to radiated heat are resistant to hight temperatures.

The safe distances from combustible materials must be respected, even when the device is switched off as it might have been programmed to switch on automatically or be started remotely.

## Environnement (suite)

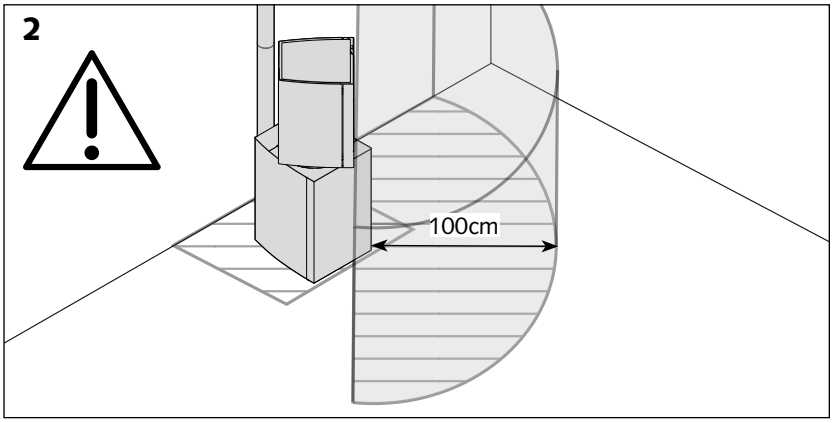


**Caution!**
Given that the lantern pivots 45° to the left and 45° to the right, the safety distance must follow the direction of the flame [diagram 2].

**Warning**
**Never leave anything on the device's lantern, even when it is switched off!**

## Recommendations before first use

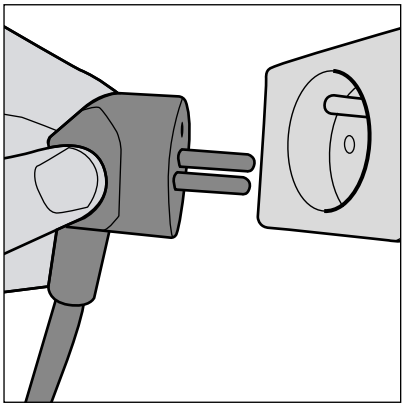

This section relates to the powering up of the appliance. This powering up must be done by an authorised Stûv installer.

The first lighting will help check that each setting is working properly and, if applicable, make fine adjustments to optimise use of the stove depending on the specifics of the installation.

> Connect the power supply to the mains (230V - 50Hz)

> Load the pellet hopper as indicated in the "Basic Procedures" section.

**Caution!**
As each appliance is tested in the factory, **it is not necessary** to pre-load the Archimedes screw. On the other hand, transport and handling of the Stûv P-10 during installation may have compacted the pellets already in the appliance. Therefore ignore the behaviour of the flame during the first few minutes of operation (it might in particular be more intense than normal).

> Turn on the appliance by following the steps outlined in the "Lighting the Stûv P-10"

## Initial cautions

Before lighting the first fire in the new stove, ensure that no element (piece of hardware, tool, etc.) has fallen into the hopper or remains in the combustion chamber.

The paint is not oven-baked; it is thus relatively fragile but will harden when heated for the first few times. Consequently, take care when handling the appliance.

When lighting the fire for the first few times, some smoke or unpleasant odours may be released from the paint, the steel's protective oil or the drying of the bricks. We recommend that you keep your first fire burning strongly for several hours with the windows open. The paint will harden and the odours will disappear.

The paint of some components inside the combustion chamber will be covered with a protective layer of carbon resulting from combustion.

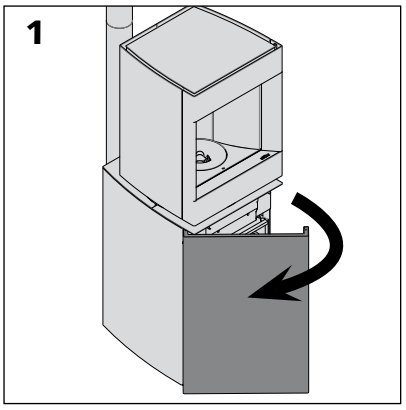


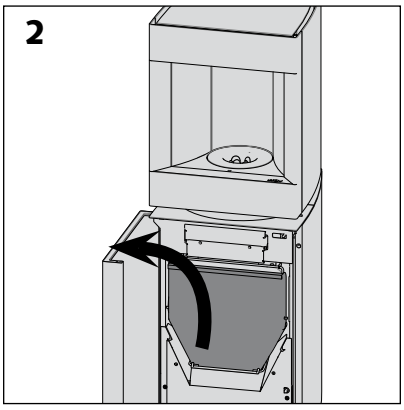


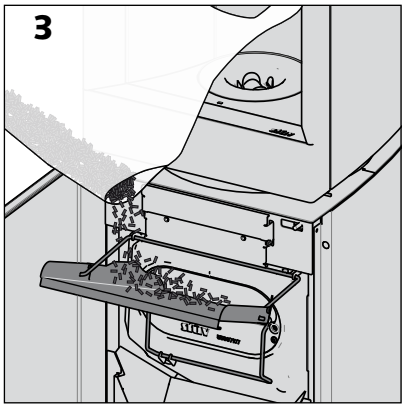

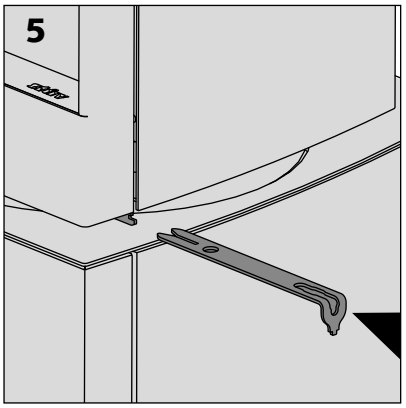


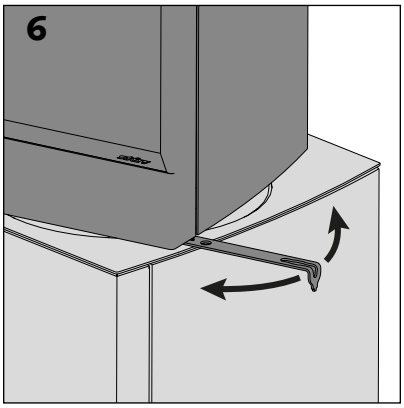


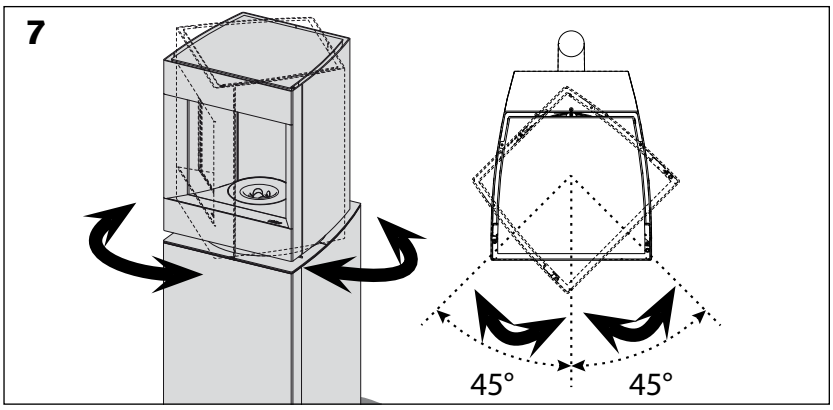


**Refuelling with pellets.**

It is advisable to refuel the hopper with pellets when the appliance is not lit.

**Caution!**
If you refuel with pellets while the unit is operating, please do not leave the door open longer than one minute, as beyond this the appliance might display an alarm or even lock down into “safe” mode.

**Reminder:** it is important to use a quality pellet (complying with DINplus, ENplus A1 or NFhp certifications) and to only pour pellets into the hopper. Avoid pouring in sawdust and dust from the bottom of the bag, as well as any other object. Use the pusher to load more pellets in the hopper and get rid of dust from the valve. Do not use your hands as a watch, bracelet or ring could damage the seal.

The Stûv P-10 is fitted with a sensor that detects the pellet level. If the sensor detects a low level, the unit will reduce its power.
If the pellet level rises, the power will go up. If the level continues to drop, the stove will go into "Shutdown" mode.
The ideal is to wait until the sensor emits a sound to fill the tank with a 15kg bag.

After refilling with pellets, close the loading valve, making sure no pellets are stuck in the seal.

**Rotating the lantern**
Use the cool handle to turn the device lantern round 90° [diagrams 6-7].

Your Stûv P10.3 can be controlled from three user interfaces that can be operated in parallel.
The basic control interfaces are the simplified control display integrated in the appliance (SCD) and the mobile application "STÛV Pellets". The remote control is an option that you can purchase from your dealer.

## OVERVIEW OF THE CONTROL INTERFACES AND THE REMOTE CONTROL OPTION

### CONTROL INTERFACES

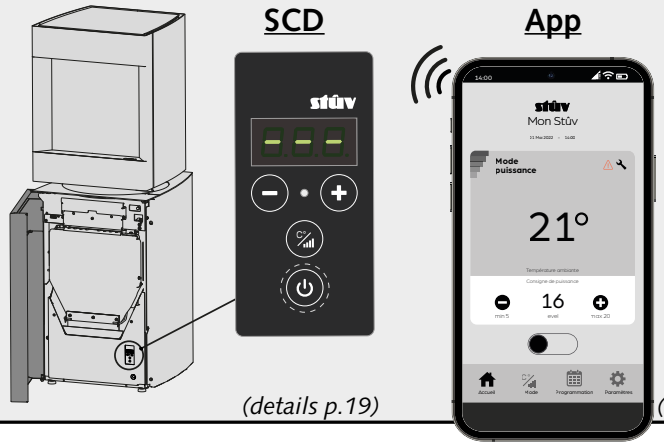


(details p.19)

(details p.21)

### REMOTE CONTROL OPTION

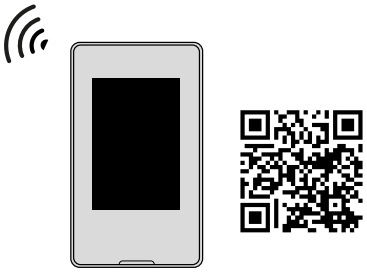

( see "**Installation instructions and directions for use**" *of the remote control* )

## USER FUNCTIONS

- **Switching on/off**
- **Power/temperature variation setpoint temperature**
- **Change of operating mode**

- **Basic functions offered by the SCD**
- **Remote control of the appliance (smartphone app. STÛV Pellets)**
- **Advanced programming in calendar mode and setting of temperature temperature modes.**
- **Access to the user manual**
- **Maintenance and follow up of the appliance**
- **Access to the guarantee**

- **Basic functions offered by the SCD**
- **Remote control of the appliance**
- **Advanced programming in calendar mode and setting of temperature modes.**

- **Thermostatic sensor** (allows the room temperature reference to be taken from the place in the living room where you place it).

## ADVANCED FUNCTIONS AND SETTINGS

- **Home network connection functions**
- **Pairing functions of the remote control.**

- **Network connection support**
- **Access to advanced settings** (pellet set, languages, date and time)
- **System and status information**
- **Alarm history**
- **Gemeinsame Nutzung der Verbindung mit dem Händler**
- **Connection to the remote control sensor**

## PRESENTATION OF THE INTEGRATED SIMPLIFIED CONTROL DISPLAY *( SCD)*

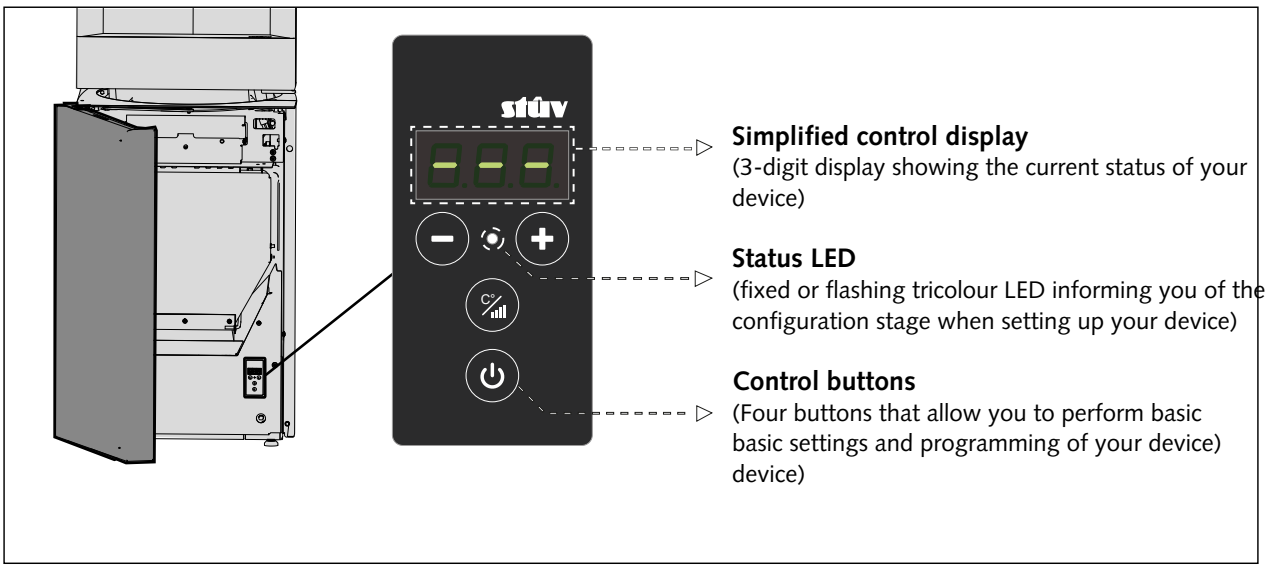


### Summary of the device status display on the SCD

| Main state | Secondary state | Display / Looped display if more than one display |
|---|---|---|
| **Off** | OFF | OFF |
| | ECO-stop | ECO |
| | No pellet | no.P |
| **Ignition** | loading | --- --- --- |
| | Ignition | On --- --- --- |
| **On** | Thermostatic<br>**ex: ambiant T°= 21.5°C**<br>**T° setpoint = 23°C** | 21.5 t.23 |
| | Power<br>**P.XX = Power level 01 to 20** | P.20 |
| | Low pellet level | P.o.P |
| **Extinction** | Extinction | OFF --- --- --- |
| | Cooling | Coo oo1 |
| | Cleaning | Cln |
| **Alarms** | A.XX<br>Alarm code 60 to 87. | A.60 |

### Summary of the display of user functions on the SCD

| | | | |
|---|---|---|---|
| Changing the setpoint | Power setpoint<br>**P.XX = power setpoints from 01 to 20** | SEt P.15 | + or − (one or more short presses) |
| | Temperature setpoint<br>**t.XX = T° setpoint** | SEt t.21 | |
| Changing the mode | To thermostatic mode | SEt 8t8. | (short press) |
| | To power mode | SEt 8P8. | |

### Summary of the SCD display in configuration mode

| | | | |
|---|---|---|---|
| Activation of the configuration mode | | ---. 888. **(flashing)** | (long press) |
| Active configuration mode | Remote control pairing | 8-8. -88- | *(see installation manual)* |
| | Network configuration | ---. | *(see installation manual)* |

## CONTROLLING THE P10.3 WITH A SMARTPHONE

**The Stûv P10.3 can be controlled via a smartphone using the "Stûv Pellets" application.**

> Download the application for free by searching for "Stûv" in the Playstore or the Appstore.

Download on the App Store

GET IT ON Google Play

>Open the application once it has been downloaded. You will be prompted to connect your device. Press it to proceed to the next step [Figure 1].

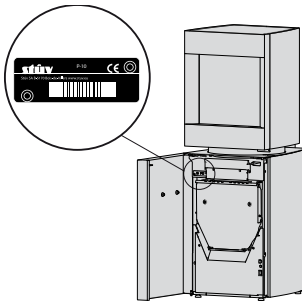

> Scan the barcode on the device identification plate [Figure 2].

**Note: it is necessary to allow access to the camera.**

> In the "Registration" window, please enter your e-mail address as well as the PIN code and the name of the device of your choice [figure 3].

> Then fill in the warranty form for your appliance [figure 4].

> The application is ready for use once your PIN code and device name have been entered [Figure 5 & 6].

⚠ **NOTE:**
**If the procedure for connecting your smartphone to the device fails, please check that:**

**- your smartphone is well connected to the internet**

**- you have authorised access to the "Stûv Pellets" application**

1

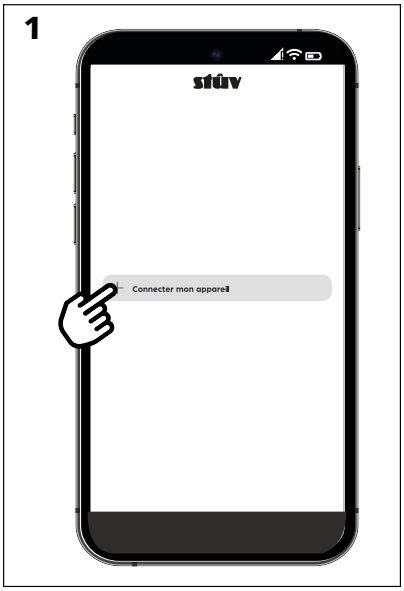


2

3

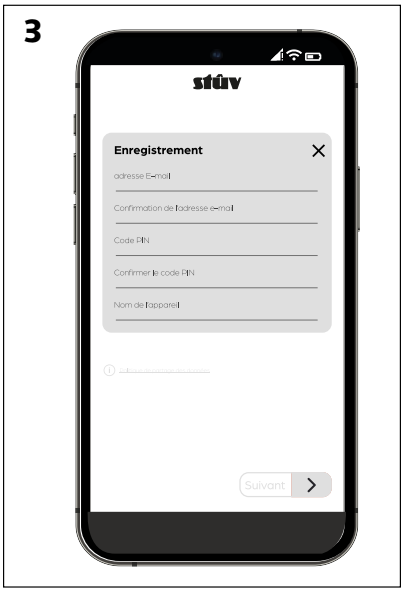


4

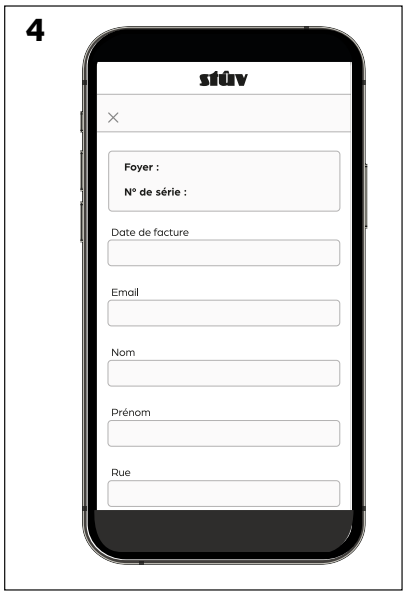


5

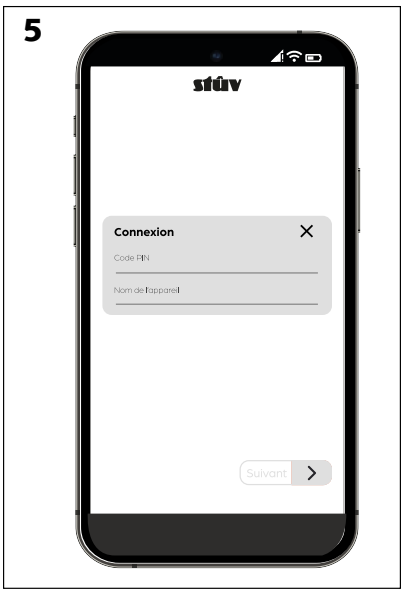


6

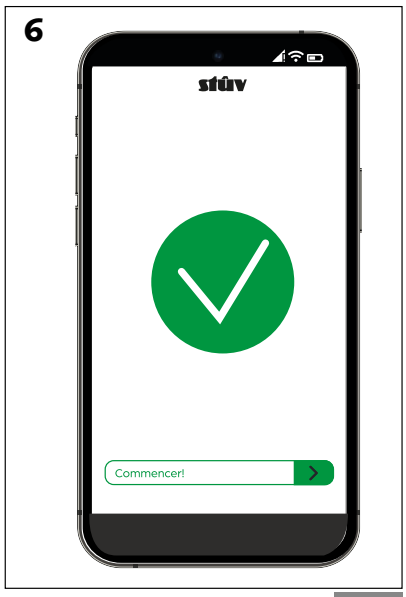

In order to fully enjoy your device, you will find below a description of the functions of your Stûv P10.3.

## MODES

### THERMOSTATIC MODE C° *AUTOMATED TEMPERATURE CONTROL*

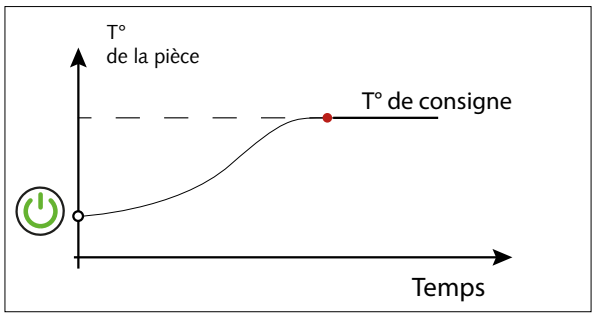


When you activate the thermostatic control mode, the appliance regulates its output to reach the set temperature (see next page).

**Activation of the Eco-stop** *(only available in thermostatic mode)*

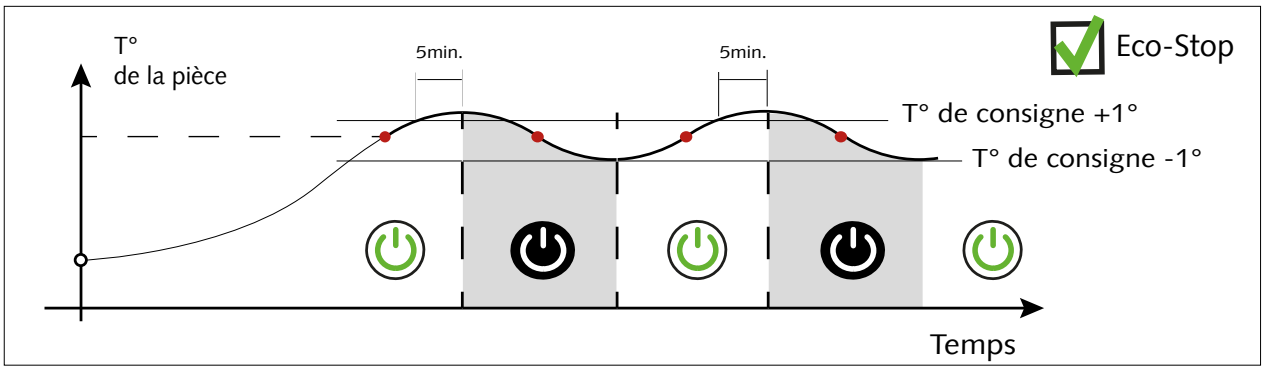


Activating the Eco-stop switches the appliance off once the set temperature is reached.
When the eco-stop is active, the appliance switches off automatically when the room temperature remains above the + 1°C setpoint for more than 5 minutes. If the room temperature drops below the - 1°C setpoint, the unit will automatically switch on again. ⚠ **Stûv recommends the Eco-stop only in a well insulated building!**

### Access through the SCD

Shortly press the mode button to switch from power mode to thermostatic mode.

### Access through the application

Shortly press the mode button to access the menu for selecting between thermostatic and power mode.

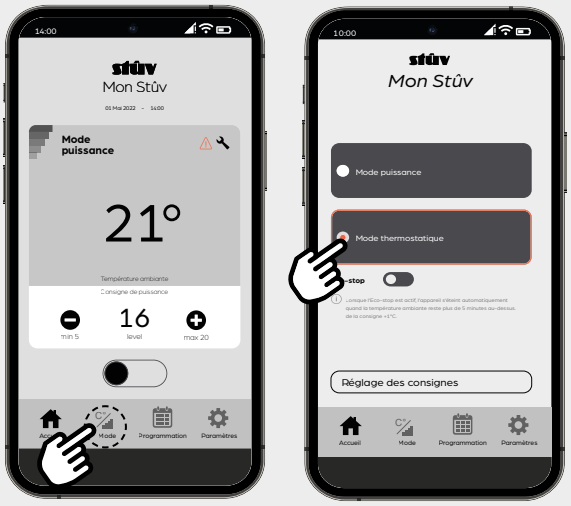

## THERMOSTATIC MODE *(continued)*

Definition of the setpoint temperature

### Access through the SCD

Pressing the + or - button briefly one or more times changes the setpoint temperature to the desired temperature

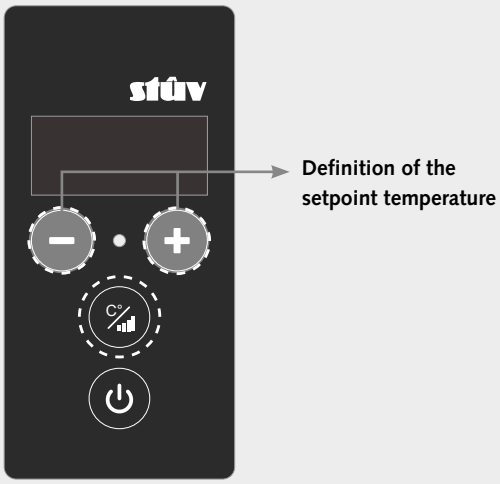


### Access through the application

The "Setpoint adjustment" button and the home shortcut allow you to change the setpoint temperature to the desired temperature.

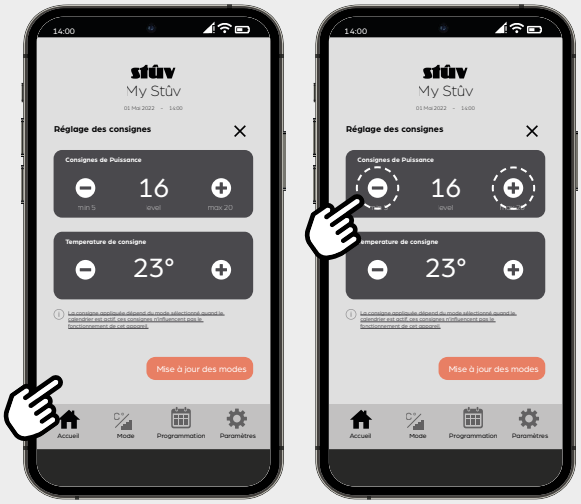

**Home shortcut**
*(only available in thermostatic mode)*

Activation/deactivation of the Eco-stop
(only available in thermostatic mode via application)

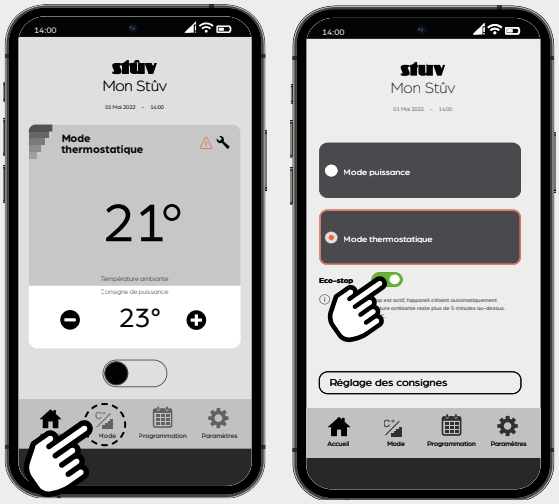

## POWER MODE *Manual mode*

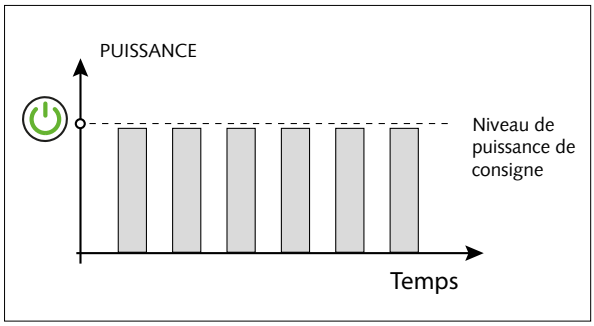


When you activate the power mode, the appliance runs permanently at the selected power level. The range of available power levels goes from level 1 (+/- 3,7 Kw) to level 20 (+/- 8Kw).

### Access through the SCD

Shortly press the mode button to switch from thermostatic to power mode.

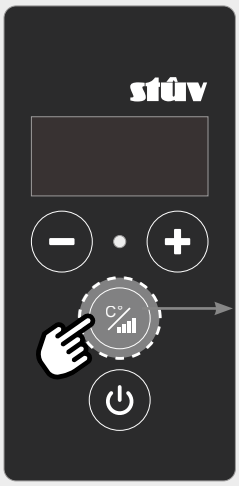


**Activation/deactivation of power mode (short presses)**

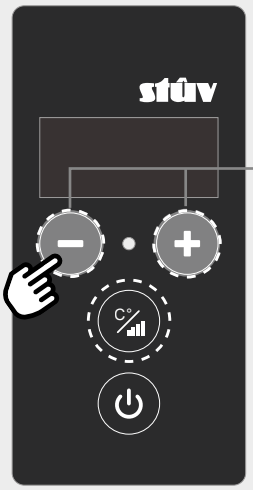


**Definition of the power setpoint**

### Access through the application

Shortly press the mode button to access the menu for selecting between thermostatic and power mode.

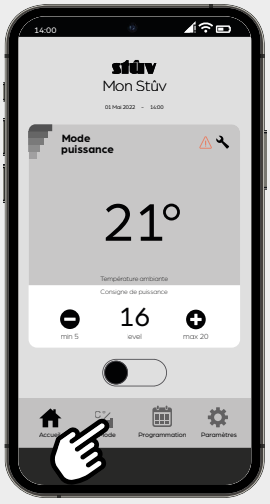

## PRECAUTION BEFORE EACH START

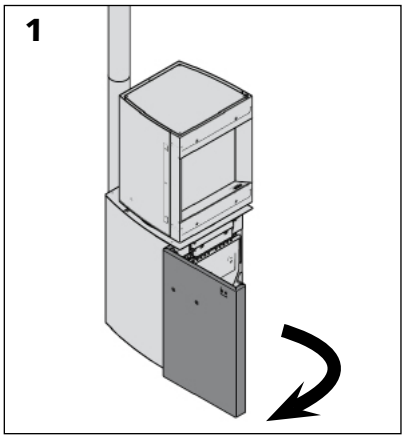


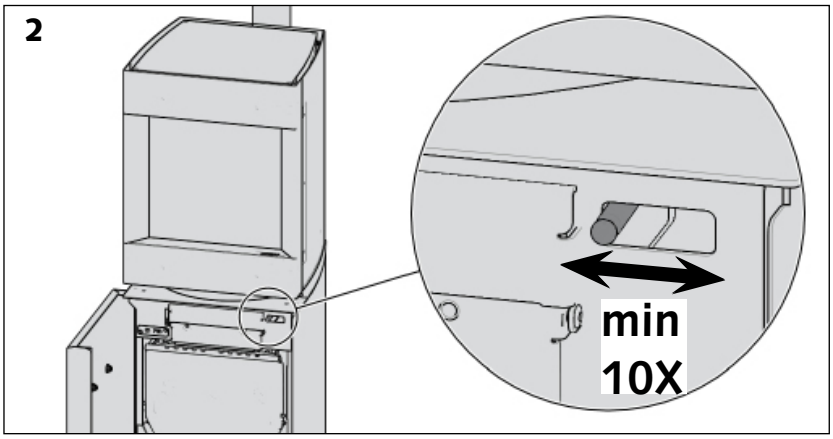


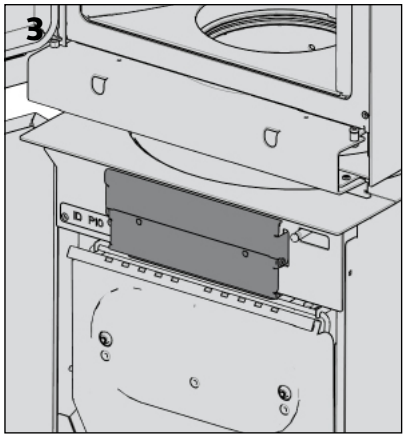


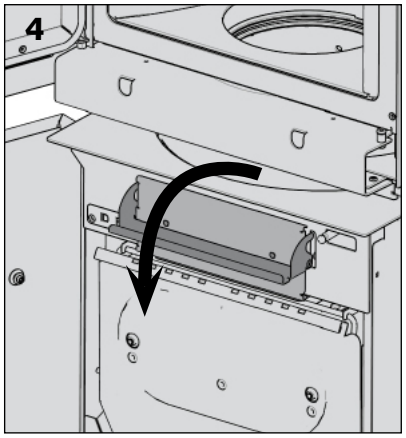


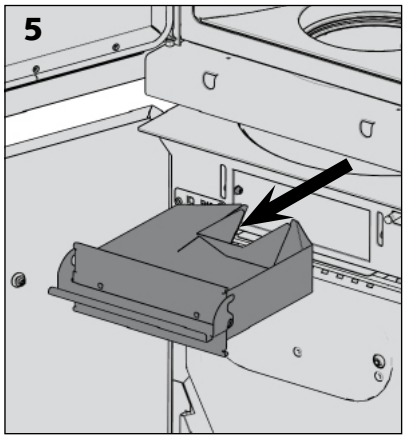

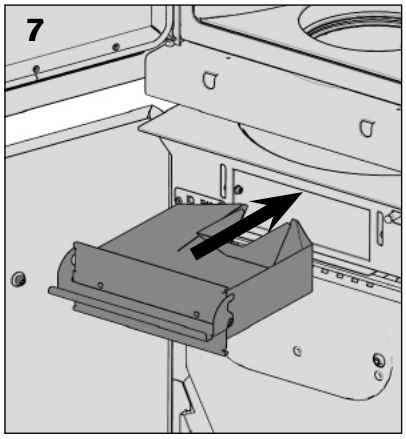


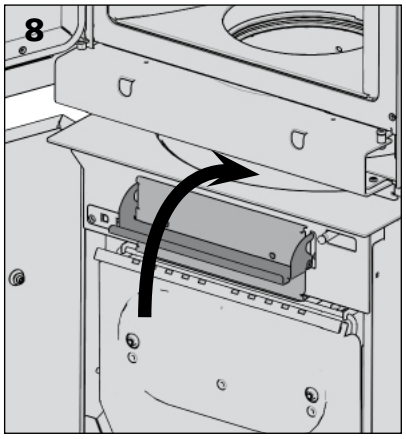


> **Before each start, actuate the ash removal control (make ten movements).**

> Check that after the operation, the control returns to its original position (rod to the right).

Note:
To check that the grille is turning correctly and goes back to its original position and to check that the ash has been removed and that the grille is clean, you can open the door, remove the vermiculite ring and the flame modeller in order to find the ash disposal grille.
To find out the procedure to follow, see section “Weekly Maintenance", "cleaning the ash removal grille" paragraph

**Caution!**
**Only remove the ash when the appliance is extinguished.**

> Empty the ashpan for every 150 Kg of pellets burned.

**Caution!**
**Only remove the ashpan when the stove is off.**
**Never touch the ashpan whe the appliae is operating (risk of burns).**

**Check carefully that there are no unburned pellets in the ashpan before the appliance is lit.**

## SWITCHING ON THE DEVICE

The ignition cycle of your appliance takes about 20 minutes and consists of the following 3 phases:

- reviewing the various sensors
- loading screws activation
- ignition of the spark plug (once the quantity of pellets fed to the burner).

These steps follow each other automatically. At the end of this cycle, the power level or temperature set point is displayed on the screen and allows navigation.

NOTE: During the lighting process, the combustion chamber may fill with smoke. This is not abnormal (e.g. slightly damp pellets, ...) and the smoke will disappear when the flame appears.

**⚠ Never unplug the appliance during the ignition phase! (even if an alarm is triggered)(unless there is a chimney fire) ⚠ Never remove ash from the device during the ignition phase!!**

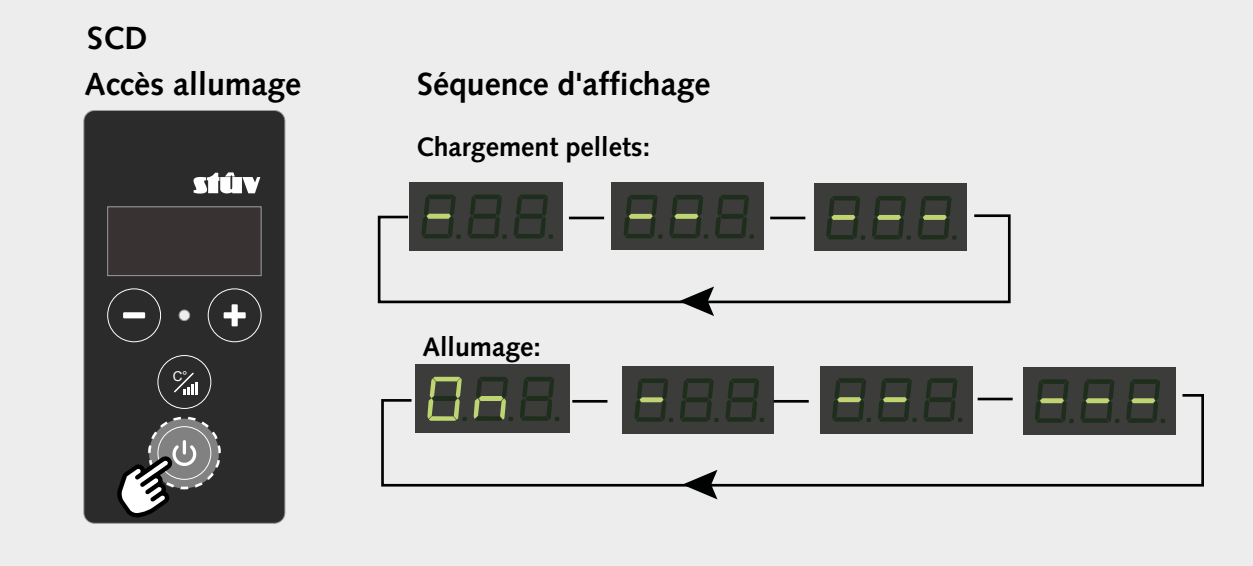


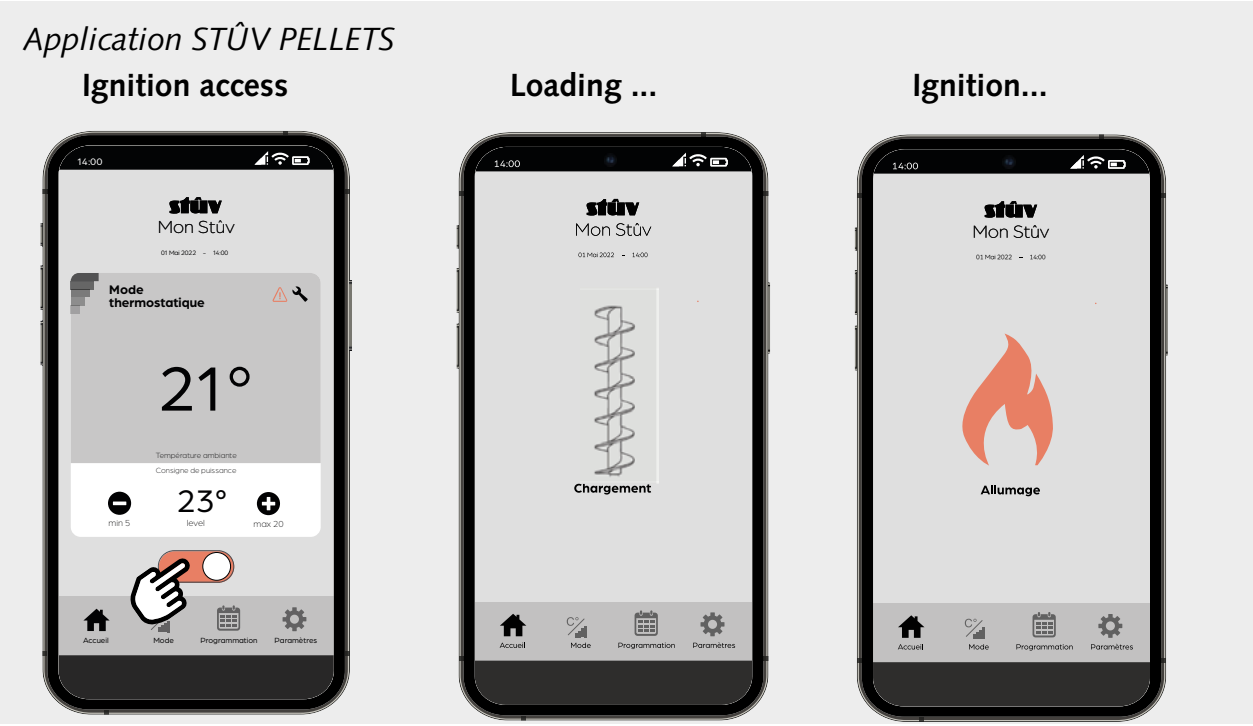

## PROGRAMMING THE CALENDAR

Available only from the application and the remote control (see p.33 for the remote control), the calendar function allows you to plan the automatic start and stop of the fireplace and to define the set temperatures to be reached.

### 1. Setting the temperature setpoints

In calendar mode, the appliance varies between a switched-off state and the activation of one of the following 3 temperature modes: a lower level **-Eco-**, an intermediate level **-Comfort-** and a higher level **-Max-**. The first step in calendar programming is to set these 3 values.
To do this, press the button and then the "**Temperature Mode**" tab.
Drag your finger up or down to set the temperature for each of the 3 modes. Note: It is best to choose increasing temperatures (e.g. yellow: 16°, orange: 19°, red: 23°). Then press "**Update setpoints**" to validate and go to the next step.

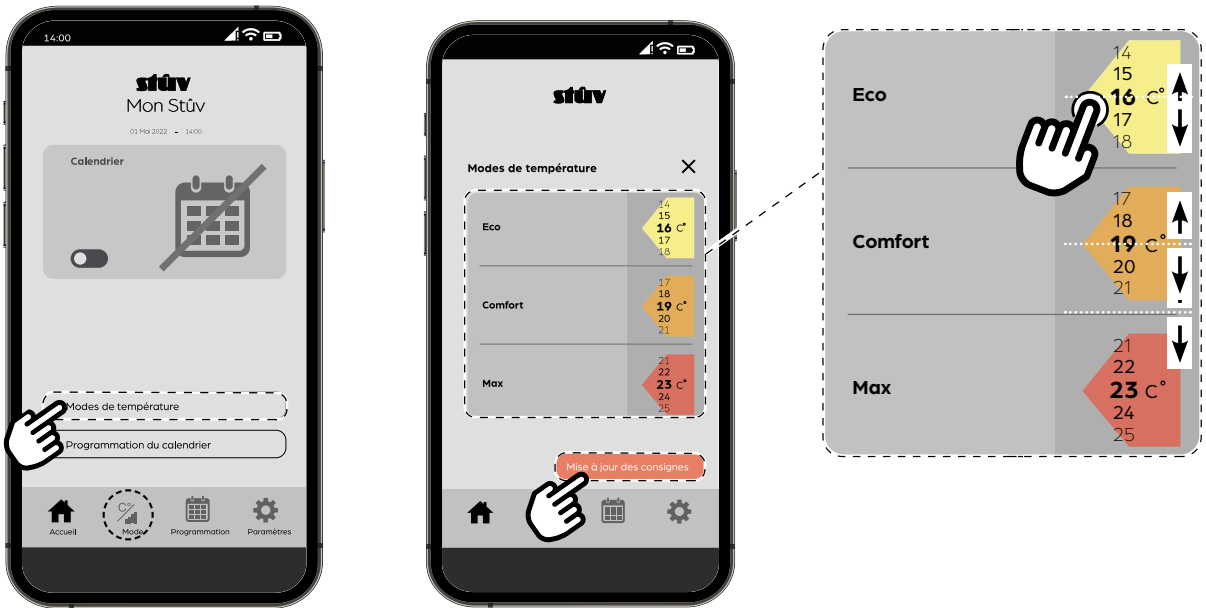

## 2. Calendar scheduling

The «**Calendar programming**» allows you to add time slots under each day of the week and assign them one of the 3 temperature modes defined in the previous point. Please follow the steps below:

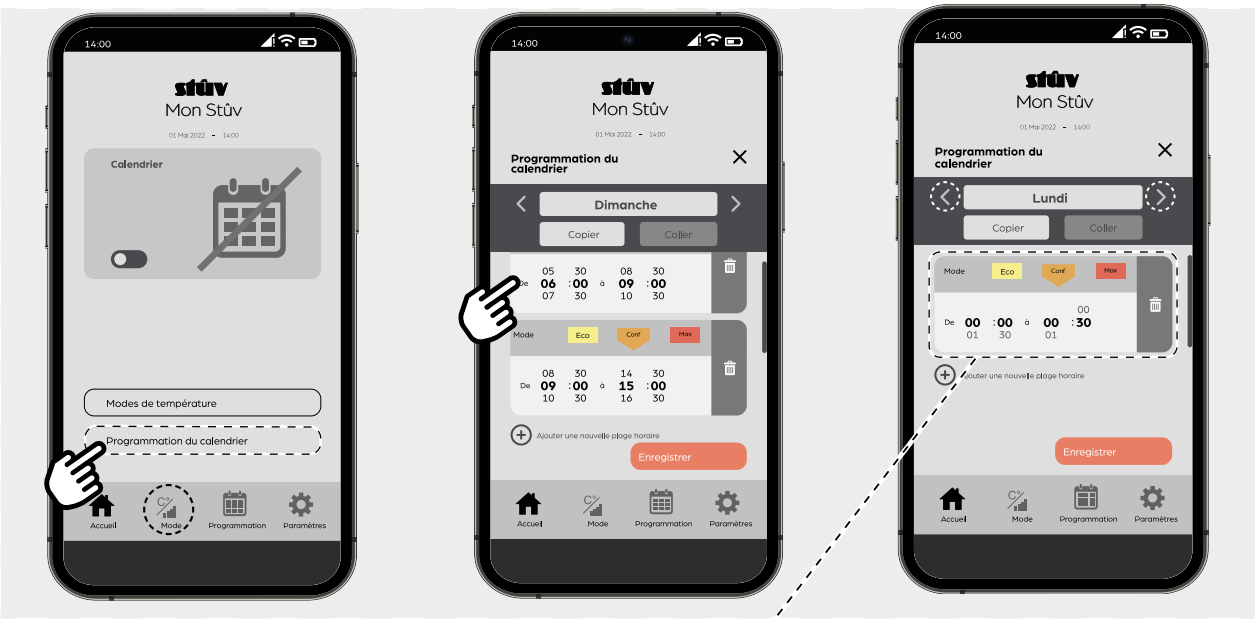


### 1. Définition d'une plage horaire

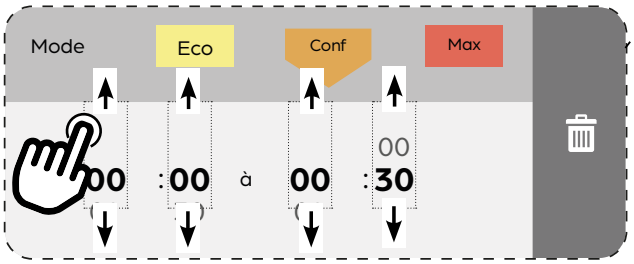


The definition of a time slot is done by increments of half an hour ⚠ **Keep in mind that any time interval between two successive time slots means that the device is switched off.**

### 2. Assignation d'une des 3 températures de consigne éditées précédemment

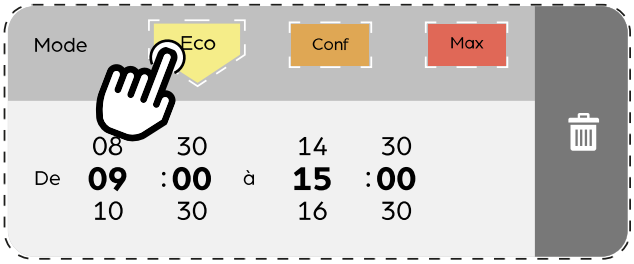


The assignment of one of the 3 temperature modes for the currently edited time slot is done by a simple press.

### 3. Ajout d'une nouvelle plage horaire

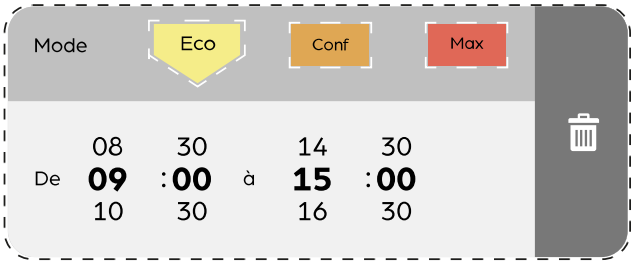


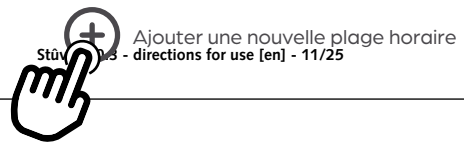

Use the arrows to navigate through the different days of the week and edit them. The "**Copy**" and "**Paste**" buttons allow you to apply your presets from one day to another.

### 3. Activating/deactivating the calendar mode

#### Deactivation by the SCD

⚠ Although the activation and programming of the calendar requires the use of the application or the remote control, **the SCD allows you to switch directly to manual mode at any time. To do so, simply press the** .

**Deactivation of the calendar mode (short presses)**

⚠ NOTE :
MANUAL switching off/on of a fireplace programmed in calendar mode means deactivating the calendar!

**Displaying the SCD in active calendar mode**

| Status of P10.3 | Status of the calendar | Looped display |
|---|---|---|
| **ON** | ON (ex: ambient T° of 23°C) | CAL t.23 |
| **OFF** | **ON** | CAL OFF |

#### Activation/deactivation by the application

*(NOTE: For the remote control, refer to the instructions on p.38).*

## SETTING THE PARAMETERS

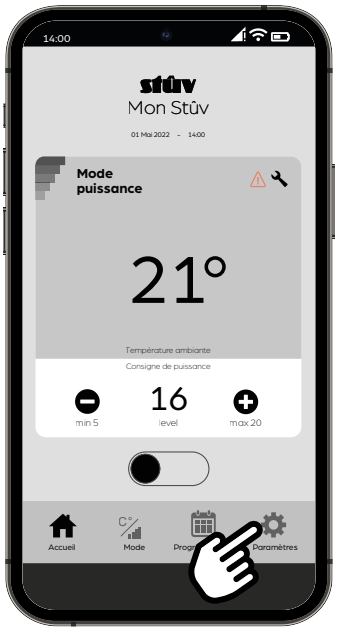


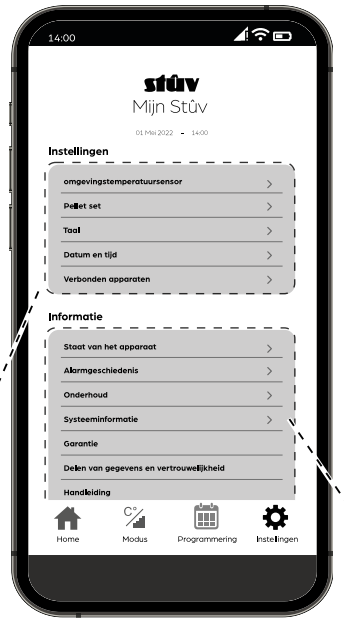


The button ⚙ allows you to access the settings of the device and to view information related to its operation.

### Settings

- Sonde de température ambiante
- Pellet set
- Langues
- Date & heure
- Appareils connectés

### Information

- État de l'appareil
- Historique des alarmes
- Entretien
- Informations système
- Garantie
- Partage des données et confidentialité
- Mode d'emploi

### Temperature sensor

The "**Room temperature probe**" selection allows you to select the origin of the temperature measurement: either the sensor integrated in the remote control or the one integrated in the fireplace.

When the remote control temperature sensor is activated, the appliance regulates its temperature according to the data sent by the remote control. Otherwise, the temperature sensor is located in the appliance.
If you choose to regulate via the remote control sensor, place it in a suitable location: not too exposed to the sun, not too close to the stove's lantern, do not leave it in a room other than the one where the Stûv P10.3 is installed, etc.

⚠ **Caution: If the remote control is switched off (e.g. because the battery is completely discharged), the heater sensor automatically takes over.**

Note: It is normal to notice a slight difference between the temperatures measured by the remote control sensor and the fireplace sensor.

## Pellet Set

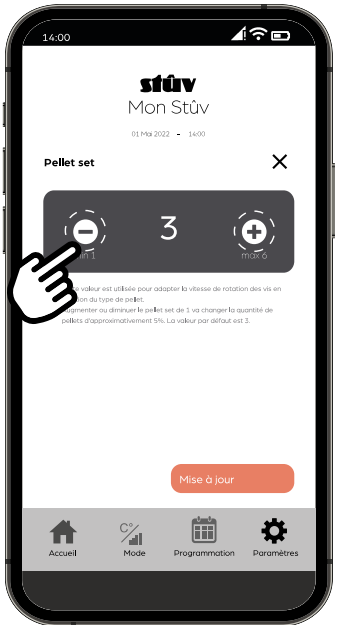


PELLET SET: The flow of pellets in the feed system depends on the characteristics of the pellets (length, density, etc.). It may therefore differ from one brand to another. For example, short pellets have a tendency to rise more rapidly in the Archimedes screws, even if they turn at a constant speed.

To compensate for this difference in flow, it is possible to correct the speed of the Archimedes screws from -15% to +15% compared to the reference value (the speed of the smoke extractor, however, is not changed, the aim being to get a correct air/fuel ratio). This is possible using the SET GRANULES menu.

**Once it is operating normally (after around 1hr) at power level Pniveau20, the following points may indicate a low pellet flow, in which case you will need to increase the SET GRANULES level:**

- Low, bright flame
- White layer on the glass

**the following points may indicate a high pellet flow, in which case you will need to decrease the SET GRANULES level:**

- Very tall, colourful flame (touching the top of the combustion chamber)
- Blackened glass

When the SET GRANULES level is increased above level 3 (increase of the speed of the Archimedes screws), the power level is deliberately restricted: it is therefore normal to no longer be able to reach Plevel20.

**> Maximum output as a function of the pellet setting:**

| Pellet Set | Max. Output |
|---|---|
| 0 | 20 |
| 1 | 20 |
| 2 | 20 |
| 3 | 20 |
| 4 | 19 |
| 5 | 18 |
| 6 | 17 |

## EXTINCTION

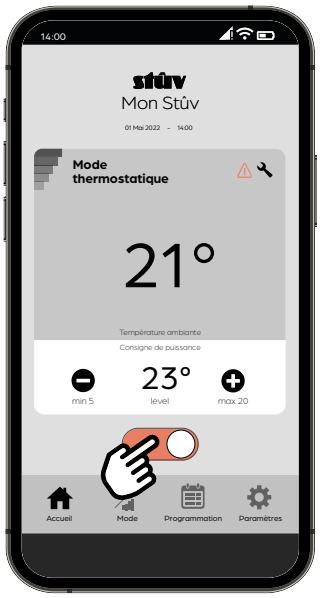

is le cycle d'extinction initié, l'apport en granulés du réservoir est intérrompu et la seconde vis de chargement se vide complètement. Le Stûv P10.3 continue donc à fonctionner pendant approximativement 15 minutes à une puissance équivalente à P10.

⚠ **Ne jamais débrancher l'appareil pour l'éteindre! (même en cas d'alarme) (sauf en cas de feu de cheminée)**

⚠ **Ne jamais décendrer pendant la phase d'extinction!**

⚠ Once the shutdown cycle has been started, you must wait until the appliance has stopped completely (**30 to 90 minutes**) before you can restart it. **During this time, the appliance will remain warm and continue to radiate heat! Caution! During the first minute of the extinguishing phase, it is possible to relight the appliance by pressing ⏻ again. HOWEVER, this is no longer possible thereafter, for safety reasons.**

## WARNINGS

### SCD

### Mobile App *STÛV PELLETS*

### Alarme "fingranule"

This warning indicates that the fireplace is shutting down or has shut down because the pellet tank is empty.

> Let the device switch off
> Once the appliance has been switched off and cooled down, remove the ash.
> Fill the pellet tank with pellets before restarting the appliance.

### Pre-alarme "basgranule"

This warning indicates that the pellet level in the tank is low.

> If the tank is not refilled within the time indicated on the remote control, the fireplace will switch off and indicate "low".

## Daily maintenance

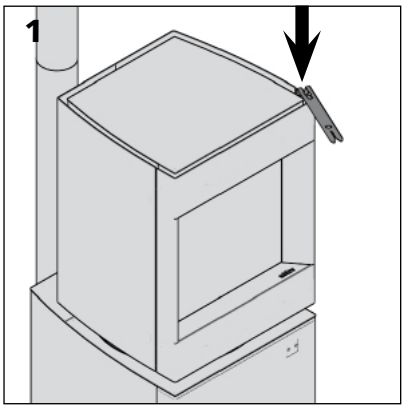


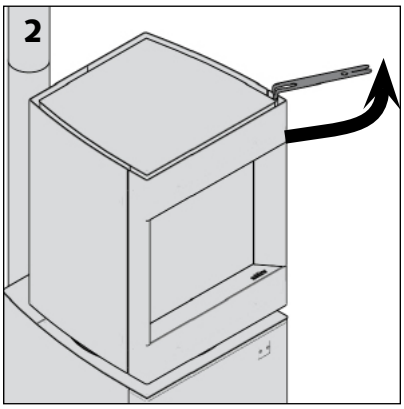


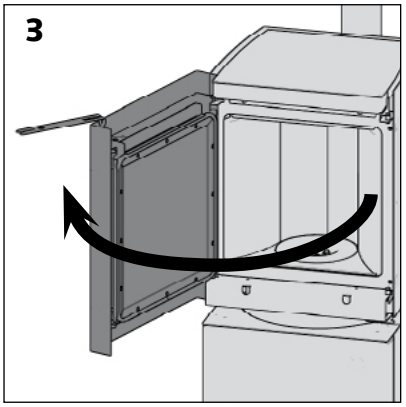


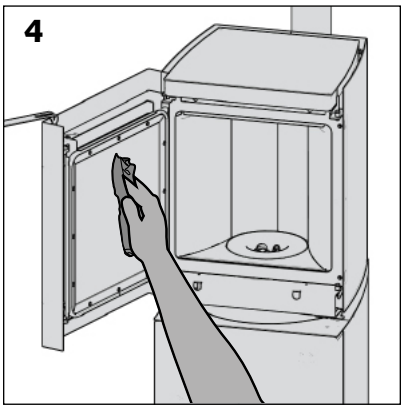


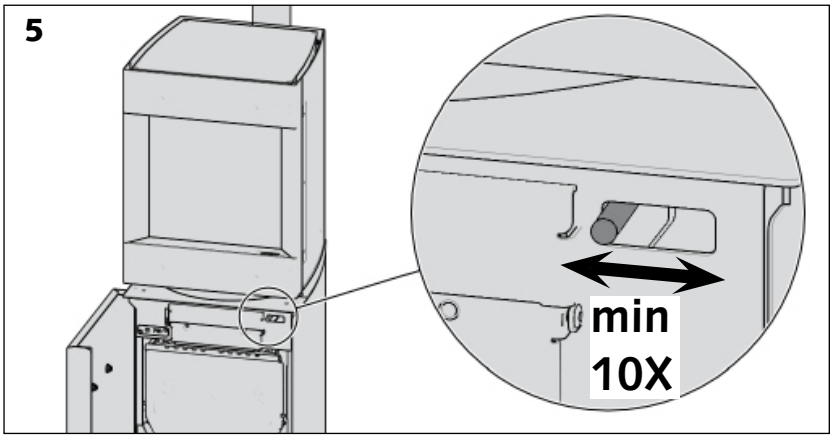


**Be careful!**

Wait until the stove has cooled down completely before carrying out maintenance.

### Maintenance of the metal components

Use a dry cloth for cleaning.

### Cleaning the glass

> Open the combustion chamber door using the control key [diagrams 1, 2 and 3].

> Clean the glass using a cleaning product specified for use on ordinary glass [diagram 4].

**Caution!**
The use of abrasive oven-cleaning products causes rapid destruction of the seals and damages the paintwork.

> Make sure the glass is properly dry because oily residues will set the smoke.

### Ash Removal

Before lighting the appliance:

> Open the bottom door.

> Use the ash removal control, make ten movements from right to left [diagram 5].

> Check that in the end, the control returns to its original position (rod to the right).

**NB!**

**Only remove the ash when the appliance is extinguished!**

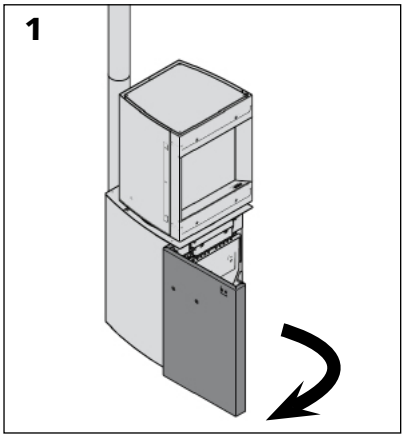


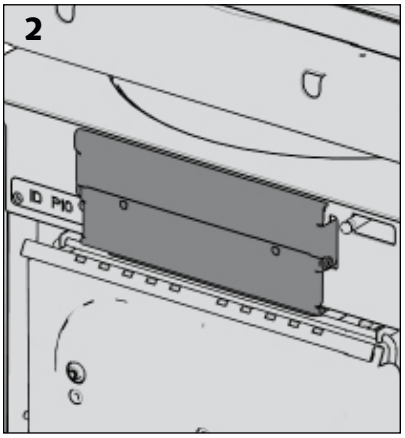


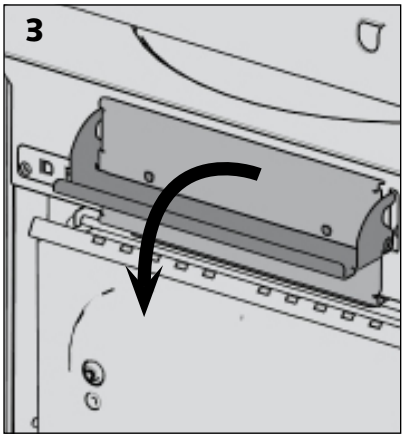


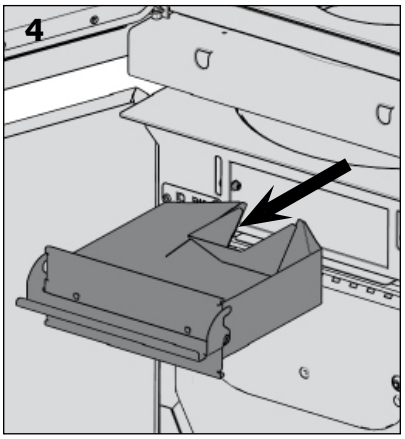

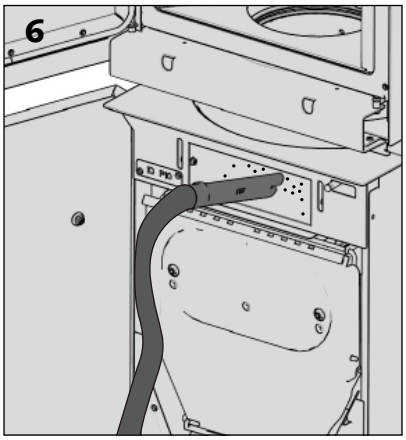


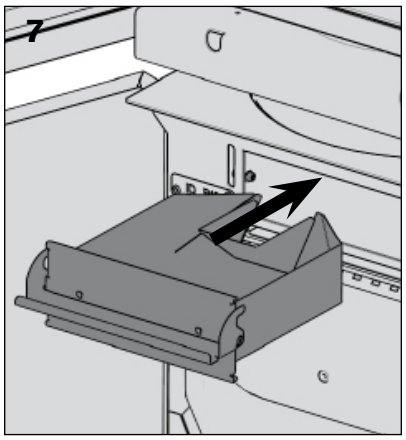


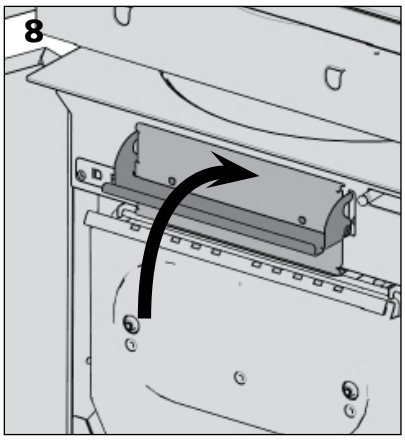


**Warning!**

Wait until the stove has cooled down completely before carrying out maintenance.

## Emptying the ashpan and cleaning its housing

> Empty the ashpan for every 150 Kg of pellets burned.

**Caution!**
Only remove the ashpan when the stove is off.
Never touch the ashpan whe the appliae is operating (risk of burns).

Ensure that the embers and ashes are cold before disposing of them in a container that can be burned or melted.

Once empty, put the ashpan back firmly into position, and make sure it is fully closed. If it is not, the device will emit a LEAK alarm.

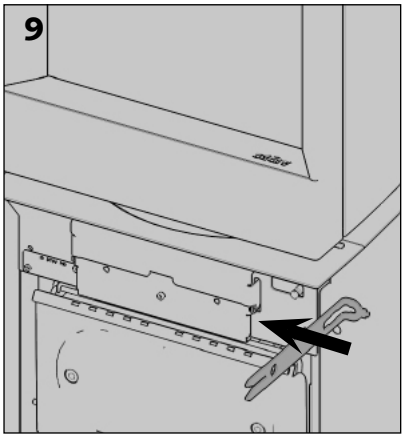


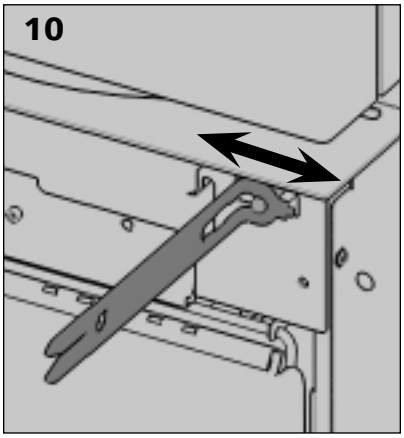


If you need to operate the grille or remove the ashpan when the appliance is hot, do these various operations using the control key.

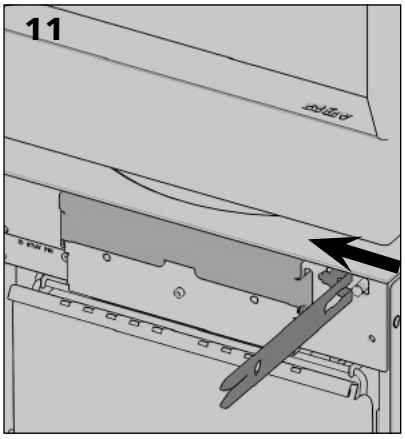


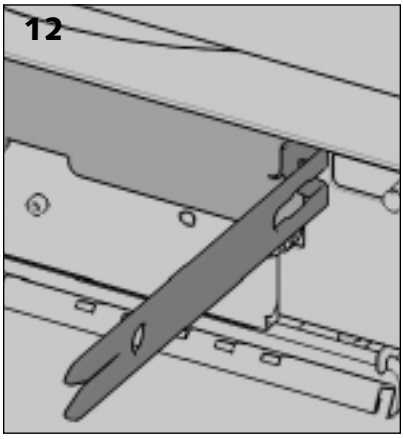


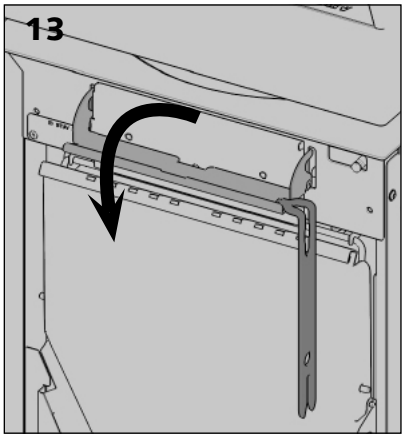


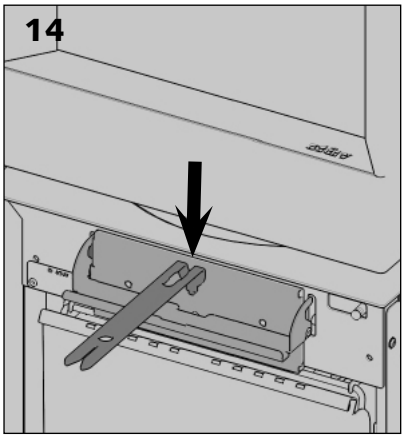


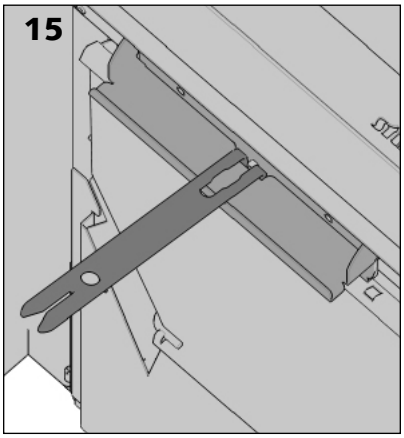


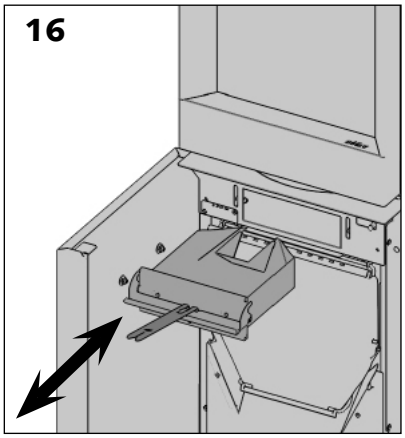


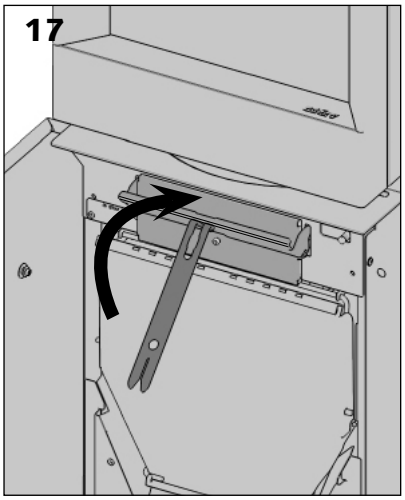

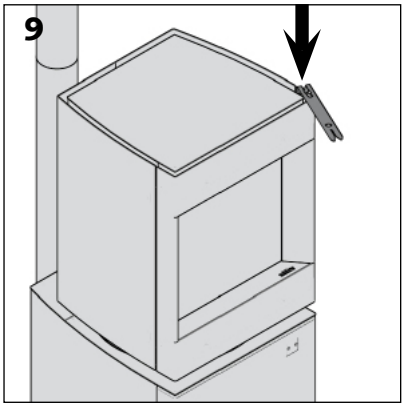


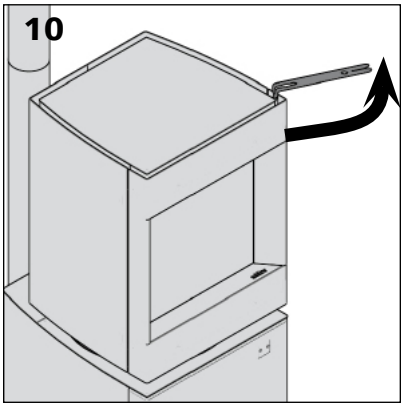


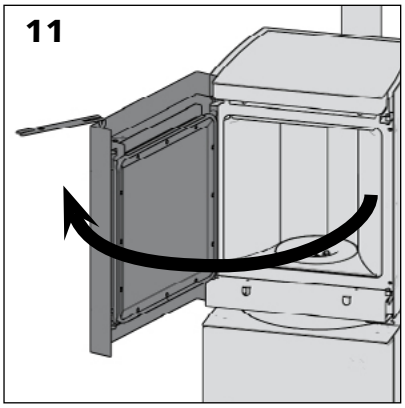


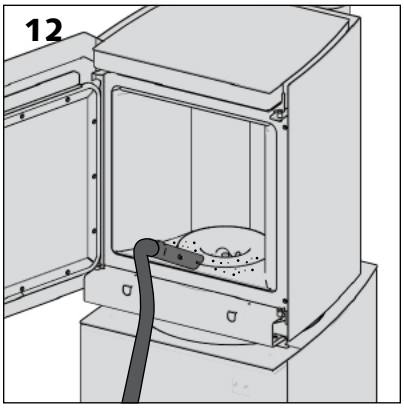


**Cleaning the combustion chamber**

> Open the combustion chamber door using the control key [diagrams 9, 10 and 11].

> Vacuum the inside of the combustion chamber [diagram 12].

> Take care to close the door using the control key. Ensure that the door is securely locked.

**Caution!**
Do not open the door of the lantern while the unit is hot.

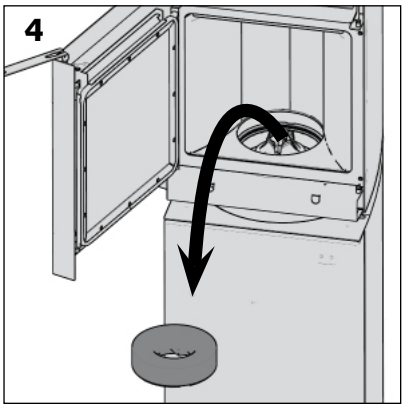


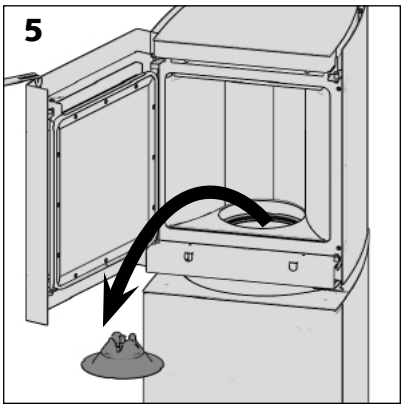


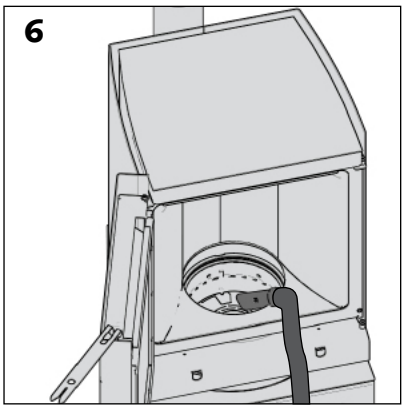


**Cleaning the ash removal grille**

> Remove the vermiculite ring.

> Remove the flame modeller.

> Vacuum the grilles.

Annual maintenance for your Stûv P-10 is essential to make sure it works properly, and must be carried out by a **professional approved by Stûv.**

**Once a year or after running for a total of 1,500 hours** (the remote control will display a message to warn you that it's time to get in touch with the professional responsible for servicing your device [figure 1]), you should:

- empty and clean the pellet hopper.

**Warning!**
**Only fill the hopper when you next use the device (to avoid the pellets deteriorating).**

- clean the extractor, its housing, the 2 smoke collectors and the pressure safety point
- clean the exchanger.
- clean the flue pipe to the chimney and sweep the chimney.
- check the door seal and replace if necessary.
- check the extractor seal and replace if necessary.
- check the burner supply elbow, replace it if necessary.
- check the pressure relief valve and replace if necessary.
- check the overheating indicator.
- check and clean the different parts of the burner.
- Re-start the counter calculating the number of hours the device is in operation before the next maintenance work needs to be carried out (in the "installer" menu on the remote control).

**N.B.:**

**Stûv's statutory and extended guarantee are not valid for devices that have not been maintained as described above.**

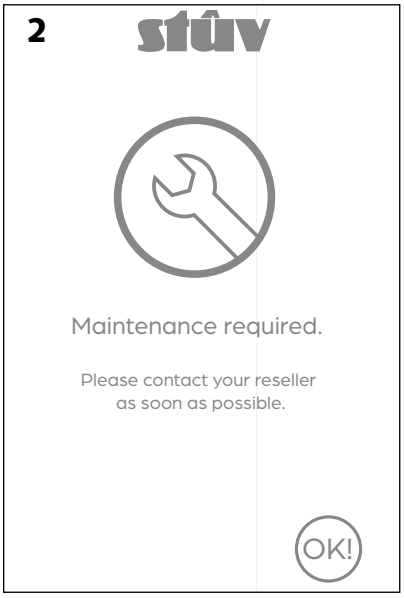

## Annual maintenance

**Make sure you keep this chart and ask your chimney expert to fill it in whenever they carry out maintenance work. In the event of a problem, Stûv's statutory and extended guarantee will only be valid for devices that have been maintained in accordance with the methods described in the previous chapter.**

| Date | Total operating hours | Sweeping | Cleaning the pellet hopper | Cleaning the smoke extractor | Cleaning the exchanger | Checking the seals | Checking the different parts of the burner | Restart hour counter | Carried out by | Comments (please note all alarms recorded etc.) |
|---|---|---|---|---|---|---|---|---|---|---|
| ..... | ..... | ❑ | ❑ | ❑ | ❑ | ❑ | ❑ | ❑ | ..... | ..... |
| ..... | ..... | ❑ | ❑ | ❑ | ❑ | ❑ | ❑ | ❑ | ..... | ..... |
| ..... | ..... | ❑ | ❑ | ❑ | ❑ | ❑ | ❑ | ❑ | ..... | ..... |
| ..... | ..... | ❑ | ❑ | ❑ | ❑ | ❑ | ❑ | ❑ | ..... | ..... |
| ..... | ..... | ❑ | ❑ | ❑ | ❑ | ❑ | ❑ | ❑ | ..... | ..... |
| ..... | ..... | ❑ | ❑ | ❑ | ❑ | ❑ | ❑ | ❑ | ..... | ..... |
| ..... | ..... | ❑ | ❑ | ❑ | ❑ | ❑ | ❑ | ❑ | ..... | ..... |
| ..... | ..... | ❑ | ❑ | ❑ | ❑ | ❑ | ❑ | ❑ | ..... | ..... |
| ..... | ..... | ❑ | ❑ | ❑ | ❑ | ❑ | ❑ | ❑ | ..... | ..... |
| ..... | ..... | ❑ | ❑ | ❑ | ❑ | ❑ | ❑ | ❑ | ..... | ..... |
| ..... | ..... | ❑ | ❑ | ❑ | ❑ | ❑ | ❑ | ❑ | ..... | ..... |
| ..... | ..... | ❑ | ❑ | ❑ | ❑ | ❑ | ❑ | ❑ | ..... | ..... |
| ..... | ..... | ❑ | ❑ | ❑ | ❑ | ❑ | ❑ | ❑ | ..... | ..... |
| ..... | ..... | ❑ | ❑ | ❑ | ❑ | ❑ | ❑ | ❑ | ..... | ..... |
| ..... | ..... | ❑ | ❑ | ❑ | ❑ | ❑ | ❑ | ❑ | ..... | ..... |
| ..... | ..... | ❑ | ❑ | ❑ | ❑ | ❑ | ❑ | ❑ | ..... | ..... |
| ..... | ..... | ❑ | ❑ | ❑ | ❑ | ❑ | ❑ | ❑ | ..... | ..... |
| ..... | ..... | ❑ | ❑ | ❑ | ❑ | ❑ | ❑ | ❑ | ..... | ..... |
| ..... | ..... | ❑ | ❑ | ❑ | ❑ | ❑ | ❑ | ❑ | ..... | ..... |
| ..... | ..... | ❑ | ❑ | ❑ | ❑ | ❑ | ❑ | ❑ | ..... | ..... |
| ..... | ..... | ❑ | ❑ | ❑ | ❑ | ❑ | ❑ | ❑ | ..... | ..... |
| ..... | ..... | ❑ | ❑ | ❑ | ❑ | ❑ | ❑ | ❑ | ..... | ..... |
| ..... | ..... | ❑ | ❑ | ❑ | ❑ | ❑ | ❑ | ❑ | ..... | ..... |
| ..... | ..... | ❑ | ❑ | ❑ | ❑ | ❑ | ❑ | ❑ | ..... | ..... |
| ..... | ..... | ❑ | ❑ | ❑ | ❑ | ❑ | ❑ | ❑ | ..... | ..... |

## Emergency switch

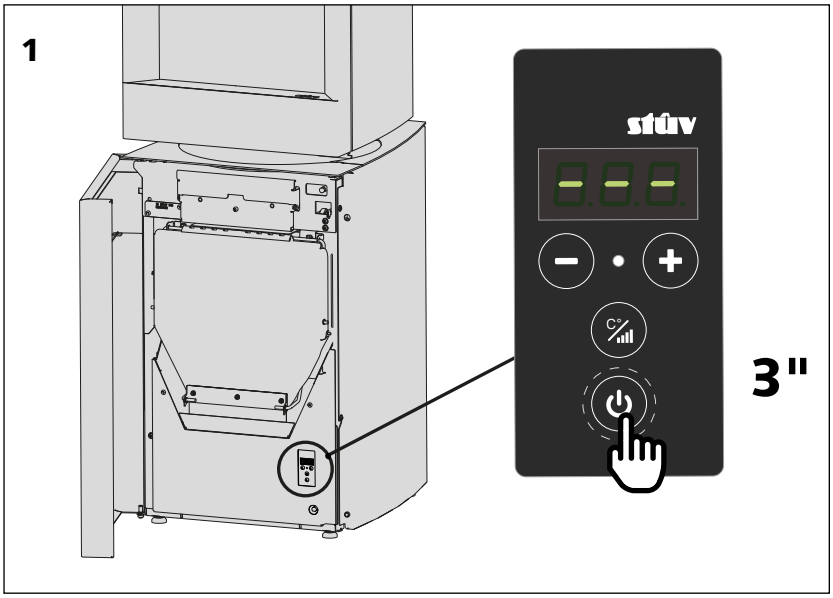


In case of a malfunction or inability to reach the application or the remote control, pressing the button ⏻ for 3 seconds will cause the appliance to switch off.

This switch can also be used in the same way to switch the fireplace on if necessary. The appliance will then start in the last used mode (calendar excluded).
**However, we recommend using the app or the remote control.**

## WHAT TO DO IN CASE OF AN ALARM?

**When an alarm occurs,** the P10.3 beeps and displays a warning message on all 3 interfaces. The procedure to follow is as follows:

1. **Identify the type of alarm** displayed on the interface. Refer to the corresponding alarm description [see alarm signal listing below*].

2. **Command the device to switch off (command only operational 5 minutes after the alarm message appears). To do this, press the SCD button** ⏻ for a long time (more than 3 sec.).

   ⚠ **WAIT FOR THE COMPLETE COOLING OF THE DEVICE before any intervention !!!**

3. **Carry out the recommendations for use** described under the corresponding alarm [see next page].

### *Alarm signal listing

| SCD display | App./ Remote control display |
|---|---|
| A.60 | Maximum temperature |
| A.61 | Negative pressure alarm |
| A.62 | Room sensor |
| A.63 | Smoke sensor |
| A.64 | Extractor |
| A.65 | Screw 1 |
| A.66 | Flow |
| A.67 | No lit |
| A.68 | No flame |
| A.69 | Screw 2 |
| A.70 | Smoke temperature |
| A.71 | Circuit board temperature |
| A.72 | Leak |
| A.73 | Deashing |
| A.74 | Screw speed ratio |
| A.77 | Loading hatch open |
| A.87 | Blackout |

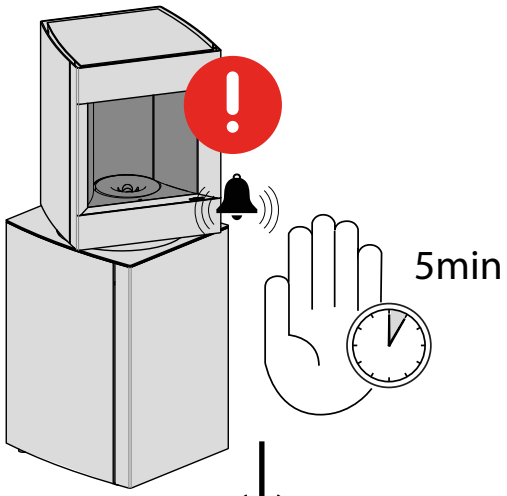


**1. Identify the type of alarm**

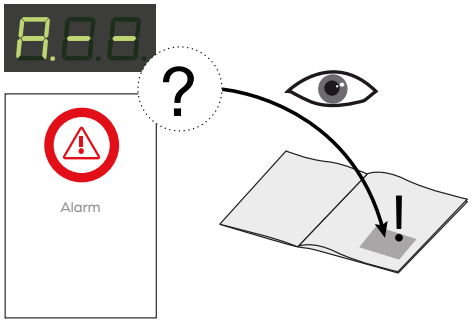


**2. Command the device to turn off.**

**3. Apply the recommendations for use** [see next page].

⚠ **WAIT FOR THE COMPLETE COOLING OF THE DEVICE** before any intervention !!!

Max. temperature alarm

**"Max. temperature" alarm**

This alarm indicates that the appliance is overheating.

**If this alarm is displayed:**

> Wait for 5 minutes then make a note of the alarm and clear it by pressing and holding

> Let the device go out

> Once the device has gone out and cooled down, **remove the ash and thoroughly clean the burner grille (see chapter entitled "weekly maintenance").**

> Make sure that the grille is in the correct position [diagram 1].

> Rearm the safety switch. The red button on the switch will only rearm if the device is cool [diagram 2].

> Restart the device. If the alarm starts again, contact the installer.

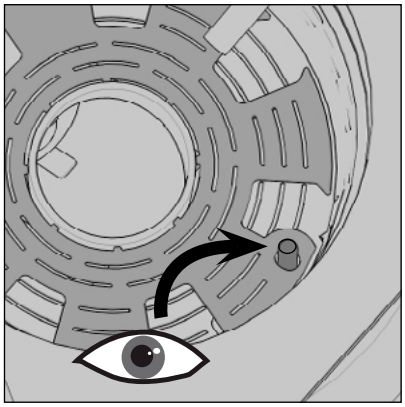

Negative pressure alarm

**Negative pressure alarm**

This alarm indicates a pressure switch malfunction or a lack of negative pressure.

**If this alarm is displayed:**

> Wait for 5 minutes then make a note of the alarm and clear it by pressing and holding

> Let the device go out

**> Once the device has gone out and cooled down, remove the ash and empty the ash pan.**

> Restart the device. If the alarm starts again, contact the installer.

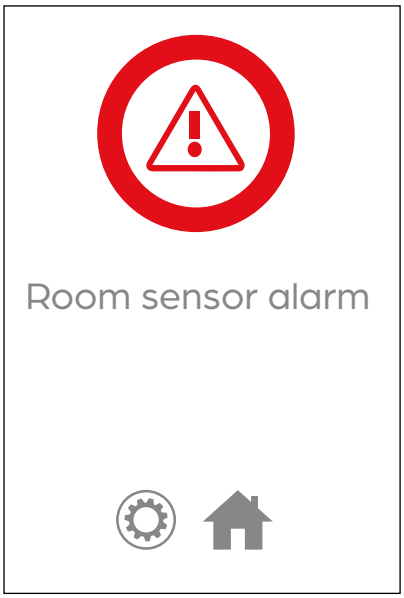


**“Room sensor” alarm**

This alarm indicates a malfunction of the ambient temperature sensor on the appliance.

**If this alarm is displayed:**

> Wait for 5 minutes then make a note of the alarm and clear it by pressing and holding

> Let the device go out

> Contact the installer.

**“Smoke sensor” alarm**

This alarm indicates a malfunction of the smoke temperature sensor on the appliance.

**If this alarm is displayed:**

> Wait for 5 minutes then make a note of the alarm and clear it by pressing and holding

> Let the device go out

> Contact the installer.

**“Extractor” alarm**

This alarm indicates a malfunction of the smoke extractor or its speed sensor.

**If this alarm is displayed:**

> Wait for 5 minutes then make a note of the alarm and clear it by pressing and holding

> Let the device go out

> Contact the installer.

**"screw 1" alarm**

This alarm indicates a malfunction of the primary screw or its speed sensor.

**If this alarm is displayed:**

> Wait for 5 minutes then make a note of the alarm and clear it by pressing and holding

> Let the device go out

> Contact the installer.

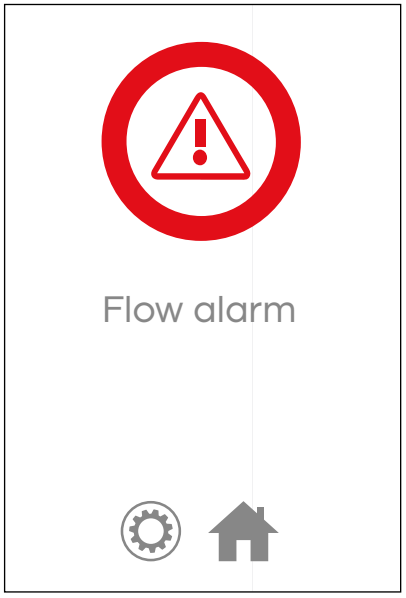


**“Flow” alarm**

This alarm indicates a flow sensor malfunction.

**If this alarm is displayed:**

> Wait for 5 minutes then make a note of the alarm and clear it by pressing and holding

> Let the device go out

> Contact the installer.

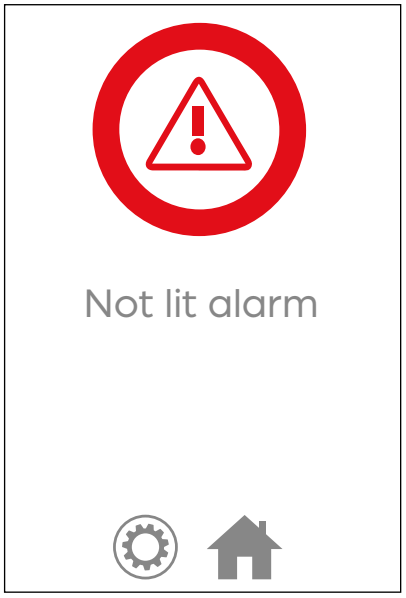


**“Not lit” alarm**

This alarm indicates an ignition fault.

**If this alarm is displayed:**

> Wait for 5 minutes then make a note of the alarm and clear it by pressing and holding

> Let the device go out

> **Warning!**
Once the device has gone out and cooled down, **remove the ash and thoroughly clean the burner grille (see chapter entitled “weekly maintenance”), making sure that no unburned pellets are left on the burner grill** then empty the ashpan.

> Make sure there are still enough pellets in the hopper.
If not, fill the hopper.

> Restart the device. If the alarm starts again, contact the installer.

**“No flame” alarm**

This alarm indicates an abnormally low smoke temperature signifying that the flame is probably out.

**If this alarm is displayed:**

> Wait for 5 minutes then make a note of the alarm and clear it by pressing and holding

> Let the device go out

> Once the device has gone out and cooled down, remove the ash, making sure that **no unburned pellets are left on the burner grille** and empty the ash pan.

> Make sure there are still enough pellets in the hopper.
If not, fill the hopper and try to light the device again. If the alarm starts again, contact the installer.

> If the hopper is full or the alarm is displayed when there is a flame, contact the installer.

**“screw 2” alarm**

This alarm indicates a malfunction of the secondary screw or its speed sensor.

**If this alarm is displayed:**

> Wait for 5 minutes then make a note of the alarm and clear it by pressing and holding

> Let the device go out

> Once the device has gone out and cooled down, **remove the ash and thoroughly clean the burner grille (see chapter entitled “weekly maintenance”), making sure that the pellet feed tube is not blocked by a clump of ash or unburned pellets. If necessary, clean the end of the tube with a vacuum cleaner.**

> Restart the device. If the alarm starts again, contact the installer.

**“Smoke temperature” alarm**

This alarm indicates that a smoke temperature has been measured that is too high.

**If this alarm is displayed:**

> Wait for 5 minutes then make a note of the alarm and clear it by pressing and holding

> Let the device go out

> Once the device has gone out and cooled down, remove the ash and empty the ash pan.

> Check the quality of the pellets being used. If the pellets are too short, the temperature of the smoke will be too high. If you aren’t sure, change the pellets.

> Restart the device. If the alarm starts again, contact the installer.

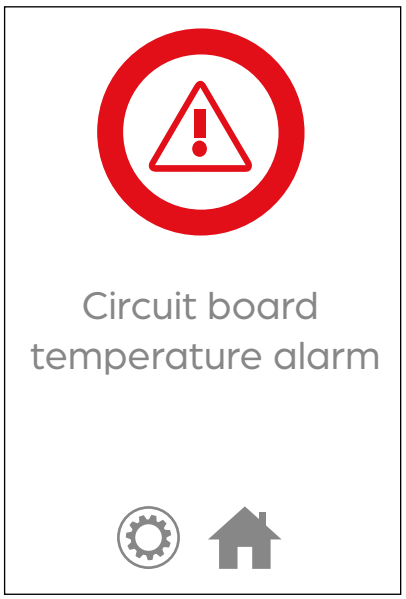


**“circuit board temperature” alarm**

This alarm appears when the electronic card exceeds 70°C.

**If this alarm is displayed:**

> Wait for 5 minutes then make a note of the alarm and clear it by pressing and holding

> Let the device go out

> Contact the installer.

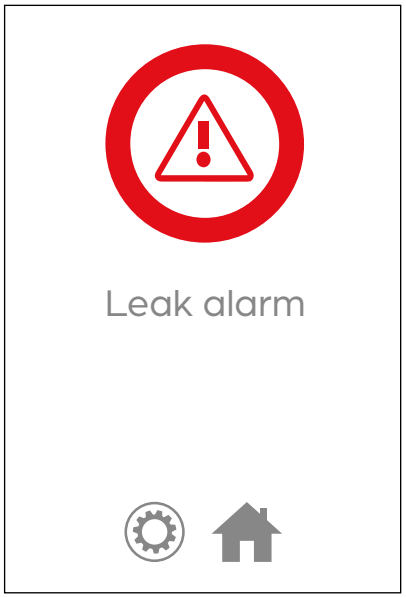


**“Leak” alarm**

This alarm appears when the flow sensor measures a flow rate that is too low.

**If this alarm is displayed:**

> Wait for 5 minutes then make a note of the alarm and clear it by pressing and holding

> Let the device go out

> Once the device has gone out and cooled down, remove the ash and empty the ash pan.

> Make sure the lantern door is closed properly and locked shut. Make sure that the pellet loading valve is closed and no pellets are stuck in its seal. Make sure that the ashpan is right at the back of its housing and properly closed and locked shut. Make sure that the chimney flue and/or the flue outlet are not blocked.

> Restart the device. If the alarm starts again, contact the installer.

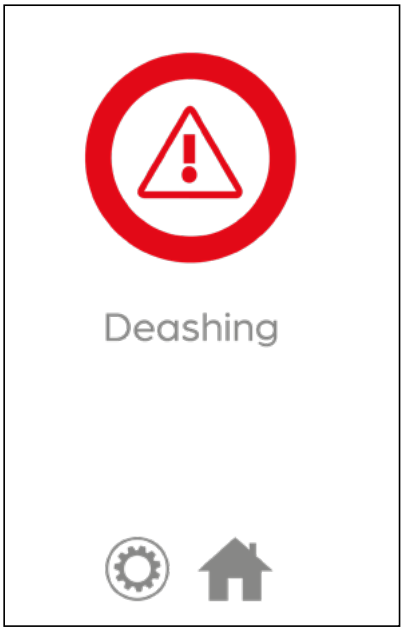


## "Deashing" alarm

This alarm indicates that the position of the ash removal grate is not correct. **If this alarm is displayed** :

> Wait 5 minutes, then note the alarm and acknowledge it by pressing and holding the SCD button .
> Allow the appliance to switch off
> Once the appliance has been switched off and cooled down, clean the burner grate, **making sure that no unburnt pellets are blocking the grate in the open position**, and **empty the ash drawer**.
> Restart the appliance. If the alarm occurs again, contact the installer.

**“Screw speed ratio” alarm**

This alarm indicates a poor speed ratio between screws 1 & 2.

**If this alarm is displayed:**

> Wait for 5 minutes then make a note of the alarm and clear it by pressing and holding

> Let the device go out

> Contact the installer.

## "Loading hatch open" alarm

This alarm indicates that **the loading hatch door has been left open** too long. Check that it is well closed, as well as the door, the bottom door and the ashpan of your appliance.

**If this alarm is displayed:**

> Let the appliance switch off.

> After the appliance has been switched off and cooled down, remove the ash.

> Fill the pellet tank before restarting the appliance.

> If the alarm persists, contact the installer.

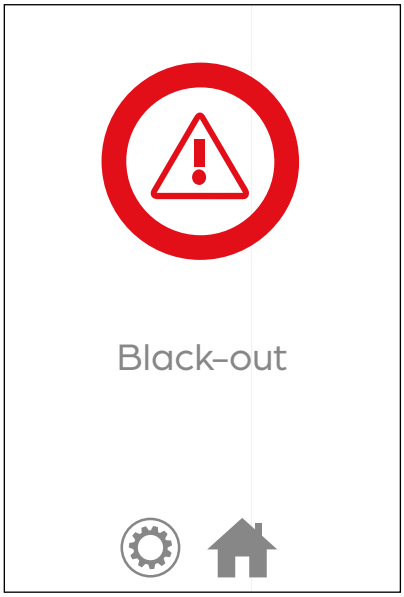


**“Blackout” alarm**

This alarm occurs when the appliance is deprived of electricity for more than 10 minutes when the stove is operating.
**Si cette alarme s'affiche :**

> Wait for 5 minutes then make a note of the alarm and clear it by pressing and holding

> Let the device go out

> Once the device has gone out and cooled down, remove the ash, making sure that **no unburned pellets are left on the burner grille** and empty the ash pan.

> Restart the device.

Remote control communication alarm

## “Remote control communication” alarm

This alarm is triggered when the remote control can no longer communicate with the stove.

**If this alarm is triggered:**

> Bring the remote control closer to the fireplace, it may be out of range.

> If the device was working when the alarm was triggered, it will carry on functioning in the last known mode until the pellet hopper is empty or the emergency stop button is used.

> If the device was off when the alarm went off, make sure it is plugged in and switched on.

> If the device is switched on, complete the remote control pairing procedure described on page 14.

> If the alarm continues, contact the installer.

ThingsPlay/Hottoh communication alarm

## “Thingsplay/Hottoh communication” alarm

This alarm is triggered when the receiving antenna is no longer communicating with the stove’s PCB.

**If this alarm is triggered:**

> If the device was working when the alarm was triggered, it will carry on functioning in the last known mode until the pellet hopper is empty or the emergency stop button is used.

> Once the device has gone out and cooled down, contact the installer.

## Location of the serial number

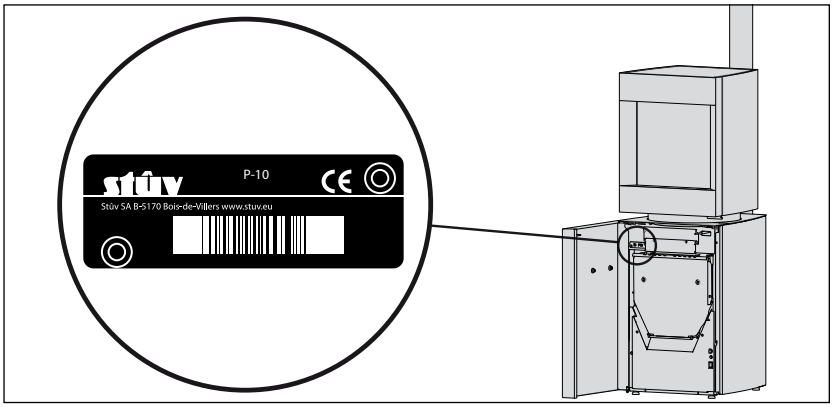


If you encounter a problem or if you notice any deterioration, please contact your installer, telling them the serial number of your appliance.

## THE EXTENSION OF THE STÛV GUARANTEE: A SIMPLE PROCEDURE FOR MORE PEACE OF MIND.

This fireplace has been designed to offer you maximum pleasure, comfort and safety. Manufactured with great care, from quality materials and components, it will give you satisfaction for many years.

If, despite our best efforts, a fault should occur, we undertake to resolve it.

If you complete the guarantee form within 30 days, Stûv will offer you an extension to the statutory warranty.

### Stûv extended warranty

Stûv's extended warranty affects any user of a Stûv appliance (end purchaser). It takes effect on the date of the original sales invoice from the seller to the buyer for new stoves (which have not been subject to being exhibited or used). For second-hand stoves, it will run from the date of the original Stûv sales invoice to the seller.

### Duration of the guarantee

The statutory warranty on the components covered is 2 years.

**The extended warranty period is:**

**3** years on the body of the stove

**2** years on the electrical and electronic components (fan, thermostat, switch, wiring, etc.)

**3** years on other components (base grate, door mechanism, hinges, pulleys, runners, clasps,...)

The right to benefit from extension of the guarantee is subject to adherence to the applicable conditions and the accuracy of the information provided to Stûv.

### Extended warranty application conditions

1. Have purchased the stove from one of our official resellers. A list of these is available on our website www.stuv.com

2. Complete the online form on http://tech.stuv.com/en/pellets/warranty/guarantee-extension.html within 30 days of the date of the invoice for the balance.

Only duly completed forms will be valid.

You will then receive your Stûv warranty certificate, by email, to the address indicated. Keep this document in a safe place. In the event of a problem with your stove, please contact your dealer. You should show them this certificate for the commercial warranty to be effective.

### Stûv stoves are guaranteed against:

– manufacturing faults,

– faults with the paintwork on the visible external parts of the stove

### The statutory warranty and extended warranty do not cover:

– the components subject to wear and tear (e.g. ash removal grill, vermiculite, seals, flame modeller, control key) which have to be replaced from time to time in normal usage,

– the ash grill stand and stove glass.

– discolouration appearing in the steel after use,

– faults that have occurred during, or that are the total or partial consequence of:

> failure to comply with the installation, usage and maintenance advice and recommendations,

> assembly/installation, modification or repair by a third party,

> installation by an unapproved installer,

> failure to follow the installation instructions,

> modifications made by the installer,

> a lack of maintenance,

> an external cause such as flooding, lightning, fire etc.,

> the use of an inappropriate fuel (only pellets that comply with the Enplus/DINplusA1 norm are appropriate). Please refer to the operating instructions.

> an obstruction, even if only partial, of the air supply inlet or smoke outlet,

> an inappropriate smoke duct for installation.

– heat cracks usually appearing in the surrounding walls,

The guarantee is restricted to the exchange of components recognized as defective excluding replacement, compensation and interest costs. The replacement components supplied under the guarantee are guaranteed for the remainder of the guarantee period.

### Your responsibility

** extension of the legal guarantee (of 2 years) to 3/2/3 years subject to adherence to the applicable conditions (see box)*

**Complete your guarantee form directly online at www.stuv.com!**

We strongly recommend:

- that you entrust installation (or in any event check-over) to a qualified professional who is able, in particular, to check that the characteristics of the smoke flue are appropriate for the stove installed and to ensure that installation meets national and regional requirements in this field;
- read the user manual carefully and follow the instructions for maintenance;
- have the flue swept regularly to ensure optimal operation. We recommend sweeping at least once or twice a year and definitely before relighting the stove after a long period of inactivity either in general or just before the season when heat is required.

### Please note

As a consumer, you have legal rights under national legislation in force governing the sale of consumer goods. Your rights are not affected by this commercial guarantee.

# EU DECLARATION OF PERFORMANCE (EU305/2011)

In accordance with EN16510-1 & EN16510-2-6:2022

**Product and manufacturer informations:**

## STÛV P10.3

Domestic wood pellet heating appliance without a hot water supply
(wood pellet only)
Manufactured by:
Stûv s.a
Rue Jules Borbouse, 4 B-5170 Bois-de-Villers
Tel.: +32(0)81.43.47.96 - Fax: +32(0)81.43.48.74
info@stuv.com - www.stuv.com

**European standards**

**Notified test laboratory:**
1880 - Acteco
Via Amman, 41, 33084 Cordenons PN Italy

Document number: QA231478502
Test report number: 1880-AoP-012-22
System to assess and check the consistency of performance: 3

| **Hygiene, health and environment** | at nominal heat output | at part load heat output |
|---|---|---|
| Carbon monoxide emission (CO) | 20 mg/Nm³ | 137 mg/Nm³ |
| Nitrogen oxides emission (NOx) | 79 mg/Nm³ | 58 mg/Nm³ |
| Emission of organic gaseous carbon (OGC) | < 1 mg/Nm³ | 3 mg/Nm³ |
| Particulate matter emissions (PM) | 12 mg/Nm³ | 4 mg/Nm³ |
| **Safety and accessibility in use** | | |
| Flue gaz outlet temperature | 184.6 °C | 122.5 °C |
| Minimum flue draught | 12 Pa | 10 Pa |
| Flue gas mass flow | 4.9 g/s | 4.0 g/s |
| **Energy economy and heat retention** | | |
| Space heat output | 8.1 kW | 3.7 kW |
| Water heat output | n.a. | n.a. |
| Efficiency | 92.0 % | 91.6% |

| **Fire safety on safety test heat output** | | |
|---|---|---|
| Reaction to fire | | A1 |
| Surface temperature | | Pass |
| Fire risk after the fall of burning fuel | | Pass |
| Fire safety of installation of the chimney | | T400 G |
| **Space heating efficiency** | | |
| Seasonal space heating efficiency at nominal output | | 89.0 % |
| Energy efficiency | Energy efficiency index (EEI) | 130 |
| | Energy efficiency class | A++ |
| Electric power consumption at nominal heat output | | 0.028 kW |
| Electric power consumption at part load heat output | | 0.025 kW |
| Power consumption in standby mode | | 0.004 kW |
| **Sustainable use of natural resources** | | |
| Environmental sustainability | | NPD |
| **Mechanical resistance and stability** | | |
| Mechanical resistance (for the pipe to withstand) | | NPD |
| Max. water pressure when operating | | n.a. |
| Load bearing capacity (ensure the floor is resistant enough to support the stove and its possible cladding; consult a specialist if in doub) | | NPD |
| **Electrical safety** | | Pass |
| **Cleaning capacity** | | Pass |

**Minimum safety distances to adjacent combustible materials** **(following Triedron test assembly)**

| | | Total safety distance | Convection air space* | Protective insulation (thermal conductivity of 0.105 W/m.K at 400°C) |
|---|---|---|---|---|
| Rear | dR= | **200 mm** | 200 mm | - |
| Sides | dS= | **150 mm** | 150 mm | - |
| Ceiling | dC= | **500 mm** | 500 mm | - |
| Bottom | dB= | **0 mm** | 0 mm | - |
| Front | dP= | **1000 mm** | 1000 mm | - |
| Floor in front | dF= | **0 mm** | 0 mm | - |
| Side radiation area | dL= | **1000 mm** | 1000 mm | - |

* The specified safety distances are valid ONLY for fully insulated flue ducts with an insulator having a thermal conductivity of 0.07 W/m.K at 400 °C and a 25mm thickness. For all other cases, refer to the applicable regulations.

The performance of the product identified above is in conformity with the set of declared performance.
This declaration of performance is issued, in accordance with Regulation (EU) No 305/2011, under the sole responsibility of the manufacturer identified as follow:

Bois-de-Villers, October 28, 2025

Gérard Pitance
Chief Executive and Founder

Jean-François Sidler
Managing Director and Chief Executive

# EU DECLARATION OF CONFORMITY

**(in accordance with EU Directive 2014/30/EU, 2014/35/EU, 2011/65/EU & 2015/1185/EC)**

| | |
|---|---|
| Manufacturer: | STÛV SA<br>Rue Jules Borbouse,4<br>5170 Bois-de-Villers<br>Belgique |
| Product designation: | **Mechanically by wood pellets fed roomheaters without water supply** |
| Product families: | STÛV P10.3 |
| EU standards: | Products have been tested following the **EN16510-1 & EN16510-2-6** harmonized standard. |
| EU legislations: | |
| **2014/30/EU** | DIRECTIVE 2014/30/EU OF THE EUROPEAN PARLIAMENT AND OF THE COUNCIL of 26 February 2014 on the harmonisation of the laws of the Member States relating to electromagnetic compatibility, Official Journal of the EU L96, 29/03/2014, p. 79–106 |
| **2014/35/EU** | Directive 2014/35/EU of the European Parliament and of the Council of 26 February 2014 on the harmonization of the laws of the Member States relating to the making available on the market of electrical equipment designed for use within certain voltage limits, Official Journal of the EU L96, 29/03/2014, p. 357–374 |
| **2011/65/EU** | Directive on the restriction of the use of certain hazardous substances in electrical and electronic equipment |
| **2015/1185/EC** | COMMISSION REGULATION (EU) 2015/1185 of 24 April 2015 implementing Directive 2009/125/EC of the European Parliament and of the Council with regard to ecodesign requirements for solid fuel local space heaters |

This declaration of conformity is issued under the sole responsibility of the manufacturer.
We confirm the conformity of the above-mentioned products with the above-mentioned standards and legislations.

Signed for and on behalf of STÛV SA,
Bois-de-Villers, 19/06/2024.

Thomas Duquesne
Science & Technology manager
certifications@stuv.be

## CONTACTS

**Stûv stoves are designed and manufactured in Belgium by:**

Stûv sa
rue Jules Borbouse 4
B-5170 Bois-de-Villers (Belgium)
info@stuv.com – www.stuv.com

Stûv reserves the right to make changes without prior notice.
These instructions have been produced with the greatest of care.
However, we do not accept responsibility for any errors that may have been made.
Editor: Gérard Pitance - rue Jules Borbouse 4 - 5170 Bois-de-Villers - Belgium

[nl] [de] [it] [es] [pt] [cz] [en] [fr] >
This document is available in several languages:
Contact your distributor or visit www.stuv.com

93109209 - directions for use - Stûv P-10.3