For professionals

Installation instructions

EN

This guide is available in digital format at:
www.stuv.com
Find us also on:

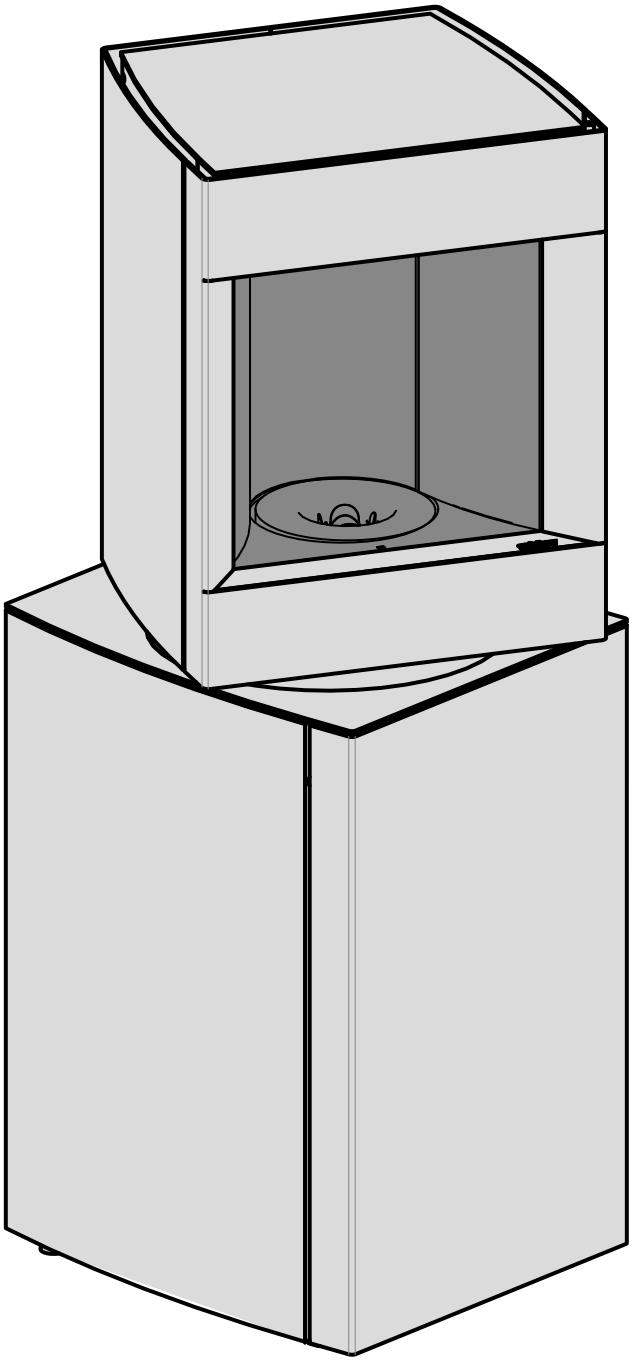

stûv P-10.3

Novembre 2025
APF 137
242026 > ...

WELCOME TO THE WORLD OF STÛV!

You have just opted for an eco-friendly, high-performance heating system.

We hope that you enjoy using it from this moment on.
You will find advice and the installation instructions in this document.
The operating instructions, which are on an additional leaflet, will guide you on the use and maintenance of your Stûv.

We highly recommend that you entrust the installation of this Stûv to a qualified professional who can especially check that the characteristics of the flue correspond to the installed stove.
The installation of the stove, its accessories and the materials which surround it must comply with all regulations (local and national) and all of the standards (national and European) of the country of installation.

Any changes made to the appliance can be dangerous.
In addition, the appliance will no longer be covered by its warranty.

We recommend that you read this manual before carrying out the installation.

CONTENTS

PRESENTATION OF THE PRODUCT	**6**
Standards, certification and technical characteristics	6
Ecodesign technical parameters	8
Stûv P-10 marking	9
Kennzeichnung des Stûv P-10	9
Materials and main components	10
Recommendations for dismantling, recycling and disposal of the appliance at the end of its life cycle	10
Legal terms of use	10
Fireplace dimensions	11
Overview of the stove components	12
Facing trim kit - sizes of trim parts (option)	13
PREPARATION OF THE AREA	**14**
Recommandations	14
Combustion air inlet	14
Electrical power supply	15
Holding capacity of the structure	15
Safety distance to combustible materials	15
Smoke flue	16
Connection to the smoke flue	17
Circulation of convection air	20
INSTALLATION	**21**
On taking delivery of the equipment	21
Unpacking	21
Transporting the stove	23
Positioning of the stove	25
Checking the contents of the combustion chamber	26
Remote control start-up (optional)	26
Connection with outside air (option)	27
Connection to the smoke flue	28
Final assembly	28
Final assembly - Fitting the trim facings	33
STARTING UP	**42**
Powering up the Stûv P-10	42
Installing the device on the home Wi-Fi network	44
Setting up the device on the home WiFi network	46
Controlling the Stûv P-10 with a smartphone	50
Flux calibration (mandatory after each transport)	51

Flue gas calibration 52
Filling the pellet hopper 53
Checks before the first lighting of the appliance 53
Lighting the Stûv P-10 55
Once the appliance is lit... 55

ACCEPTANCE OF WORKS **56**

CONTACTS **58**

Standards, certification and technical characteristics

The Stûv P-10 stove (for intermittent operation) comply with the requirements of EN European Standards (in terms of efficiency, gas emissions, safety etc…) **EN16510-1 & EN16510-2-6:2022**.

Data provided in this notice are supplied by a certified laboratory.

Stûv P-10s are covered by:
patents nos.:
EP 2304319
JP 5390603
US 8.904.944
US 8.826.899
+ Patents pending

model drawing nos.:
DM/72417
DM/72418
002500942-0001
002500942-0002

Results of tests according to EN16510-2-6:2022 standards:
Domestic wood pellet convection heating appliances

Stûv P-10.3

System mass	175 kg

Calculation data for ducts according to EN13384-1

	Minimum power	Maximum power
CO emissions	0,011 %	0,002 %
Heat output	3,7 kw	8,1 kw
Performance	91,6 %	92,0 %
Average smoke temperature	122°C	184°C
Weight-flow ratio of smokes	4,0 g/s	4,9 g/s
Recommended draught	3 Pa	6 Pa
Minimum draught at the output of the appliance for flue calculation	0 Pa	0 Pa

Requirements relating to the electrical power supply

Voltage	230 V
Frequency	50 Hz
Electric power consumption on ignition	1000 W
Electrical power consumption under normal operation	40 W
Electrical power consumption in standby mode	3 W

Requirements relating to fuel

Recommended fuel	Granulés de bois exclusivement
Certification	Din plus, EN plus A1, NF biocombustibles HP
Diameter	6 mm

Air supply requirements

Minimum diameter of the air supply duct	60 mm
Maximum length of air supply duct	5 m
Maximum number of 90° bends	4
Minimum cross-section of combustion air supply from outside (when the fireplace is not connected directly to the outside air)	30 cm²

In all cases, your installation must comply with standards EN 15287-1 or -2 and their appendices. Consequently, your smoke flue must comply with standard EN 13384 -1 and its appendix.

ECODESIGN TECHNICAL PARAMETERS FOR DECENTRALISED SOLID FUEL HEATERS

according to commission (EU) 2015/1185 and 2015/1186 and Ecodesign regulations

Details of the device:

Model reference(s) :	STÛV P10.3	Notified body/ Body number :	ACTECO / 1880
Equivalent(s) model(s) :	-	Test report number :	1880-AoP-012-22
Indirect heating functionality :	no	Application of harmonised standards :	EN16510-1 & EN16510-2-6:2022
Direct thermal power :	8,1 kW	Other standards applied / technical specifications:	-
Indirect thermal power :	0,0 kW		

Details of the reference fuel (only one) :

Fuel	Reference fuel (only one):	Other eligible fuel (s):	Seasonal space heating energy efficiency η_s [x %]:	Emissions from space heating at rated thermal output (*) :				Emissions from space heating at minimum heat output (*) (**) :			
				PM	OGC	CO	NO_x	PM	OGC	CO	NO_x
				[x] mg/Nm³ (13 % O_2)				[x] mg/Nm³ (13 % O_2)			
Wood logs with a moisture content ≤ 25%	no	no	N.A.	N.A.	N.A.	N.A.	N.A.	N.A.	N.A.	N.A.	N.A.
Compressed wood with a moisture content of < 12%	yes	no	89,0	12	<1	20	79	4	3	137	58
Any other fuel	no	no	N.A.	N.A.	N.A.	N.A.	N.A.	N.A.	N.A.	N.A.	N.A.

(*) P = particulate matter, OGCs = organic gaseous compounds, CO = carbon monoxide, NOx = nitrogen oxides.
(**) Only required if correction factors F(2) or F(3) are applied

Characteristics when operating with the reference fuel (only one) :

Characteristics	Symbol	Value	Unit
Heating output			
Thermal output	P_{nom}	8.1	kW
Minimum thermal output	P_{min}	3.7	kW
Auxiliary power consumption			
At nominal heat output	el_{max}	0.028	kW
At minimum heat output	el_{min}	0.025	kW
In standby mode	el_{SB}	0.004	kW
Permanent pilot flame power requirement			
Pilot flame power requirement (if applicable)	P_{pilot}	N.A.	kW
Energy efficiency			
Energy efficiency index	-	130	-
Energy efficiency class	-	A++	-

Characteristics	Symbol	Value	Unit
Useful efficiency (NCV as received)			
Useful efficiency at nominal heat output	$\eta_{th,nom}$	92,0	%
Useful efficiency at minimum heat output (indicative)	$\eta_{th,min}$	91,6	%
Type of heat output/room temperature control (select only one)			
Single stage heat output control, no room temperature control			no
Two or more manual stages, no room temperature control			no
With mechanic thermostat room temperature control			no
With electronic room temperature control			no
With electronic room temperature control plus day timer			no
With electronic room temperature control plus week timer			yes
Other control options (multiple selections possible)			
Room temperature control, with presence detection			no
Room temperature control, with open window detection			no
With distance control option			yes

Special precautions for assembly, installation or maintenance :

Fire protection and safety distances, such as distances to combustible building materials, must be observed! An adequate supply of combustion air to the appliance must be guaranteed at all times. The flue gas values of the appliance must be observed when dimensioning the chimney!

Fabricant	STÛV SA
Contact	Thomas Duquesne Science & Technology Manager certifications@stuv.be
Address	Rue Jules Borbouse,4 5170 Bois-de-Villers Belgique

Gérard Pitance
Administrateur délégué et Fondateur

Jean-François Sidler
Directeur Général et Administrateur délégué

Stûv P-10 marking

CE	**Intended use :** Pellet stove for space heating in residential buildings. Please read and follow the user instructions before starting! **Only use recommended fuels :** Wood pellets diameter 6 mm, quality standard EN+A1
15 Stûv S.A. Rue Jules Borbouse 4, 5170 Bois-de-villers **STÛV P10.3**	European Standards: EN 16510-1 & EN 16510-2-6:2022 Notified body identification number: 1880 Declaration of performance reference number : QA231478502

Hygiene, health and environment		**Nominal output**	**Part load output**
Emissions at 13% d'oxygène	**CO**	20 mg/Nm³	137 mg/Nm³
	NOx	79 mg/Nm³	58 mg/Nm³
	OGC	<1 mg/Nm³	3 mg/Nm³
	PM	12 mg/Nm³	4 mg/Nm³

Fire safety		Total distance	Convection air space	Insulation (Thermal conduct. of 0.105 W/m.K at 400°C)
Rear	**dR**	200 mm	200 mm	-
Sides	**dS**	150 mm	150 mm	-
Ceiling	**dC**	500 mm	500 mm	-
Bottom	**dB**	0mm	0mm	-
Front (e.g. furniture)	**dP**	1000 mm	1000 mm	-
Floor in front	**dF**	0mm	0mm	-
Side radiation	**dL**	1000 mm	1000 mm	-

Safety and accessibility in use	Nominal output	Part load output
Flue gas outlet temperature	185 °C	123 °C
Minimum flue draught	12 Pa	7 Pa
Flue gas mass flow	4,9 g/s	4,0 g/s
Fire safety of installation to the chimney		T 400 G

Energy economy and heat retention	Nominal output	Part load output
Space heat output	8.1 kW	3.7 kW
Water heat output	n.a.	n.a.
Efficiency	92.0 %	91.6 %
Saisonal space heating efficiency at Nom. output	89.0 %	
Energy-Efficiency Index (EEI)	130	
Energy-Efficiency class	A++	
Electric power consumption	0,028 kW	0,025 kW
Power consumption in standby mode	0,004 kW	
Electric power (peak)	0,966 kW	
Electric power (average)	0,028 kW	
Voltage	230 V	
Frequency	50 Hz	
Product type	B	
Mechanical resistance and stability		
Load bearing capacity	NPD	

Minimum clearance distance from combustible materials

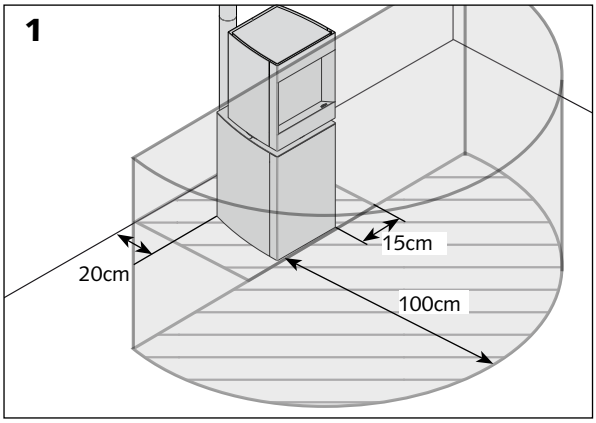

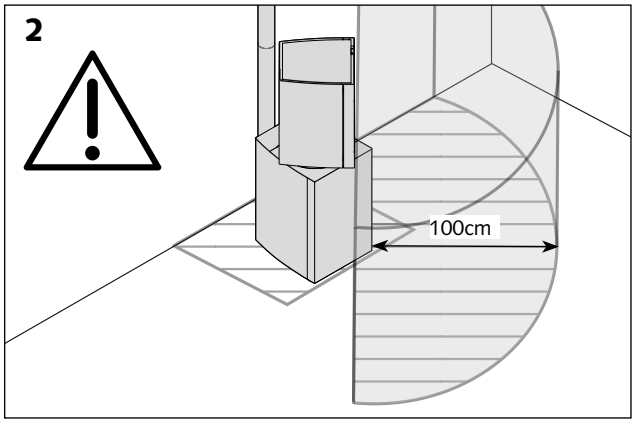

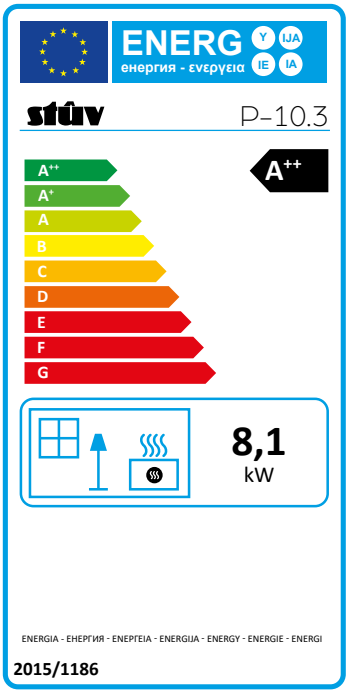

Product data sheet
EU 2015/1186

stûv

Stûv s.a.
Rue Jules Borbouse,4
5170 Bois-de-Villers
info@stuv.com – www.stuv.com

Model reference:
STÛV P10.3

Energy efficiency class	A++ (A++ ↑ G)
Direct thermal power	**8,1 kW**
Indirect thermal power	**-**
Energy efficiency rating	**130**
Output at rated termal input	**92.0 %**
Output at minimum capacity	**91,6 %**

Special precautions that must be taken during assembly, installation or maintenance of the decentralised heating device:

Consult the installation, usage and maintenance instructions

Materials and main components

The Stûv P-10 consists mainly of:

> Painted steel sheets/tubes for structural and facing elements

> The bottom facings are available in a oak-veneered wood panel finish (light or dark)

> Vermiculite for the inside of the combustion chamber

> Cast steel for the structural elements of the burner

> Aluminium for the smoke extraction flue

> HDPE for the Pellet hopper

> Remote control with PP body and PC screen, lithium-ion battery.

> A trim finishing kit is available to trim the bottom facings. In this case, the installer should check that the material chosen corresponds to the use for which it is intended.

All of these components are deemed to be compliant within tolerances and national practices.

Recommendations for dismantling, recycling and disposal of the appliance at the end of its life cycle

Stûv has a determinedly proactive responsible environmental apprach. We think about the end-of-life of our products.

Each of the device's components can be isolated so that sorting can be carried out and therefore optimum recycling.

Removal of the various parts must be done in accordance with local and national regulations.

Legal terms of use

⚠This appliance must not be used by children under 8 years of age.

⚠ This appliance may only be used by persons with reduced physical, sensory or mental capabilities if they are supervised or trained in the safe use of the appliance.

⚠ Cleaning and maintenance by the user must not be carried out by unsupervised children.

⚠ Children must not play with the appliance! Some parts of the fireplace - the glass and the outer walls - can be very hot even in normal use (rated power) and the radiation from the glass can be high.

Fireplace dimensions

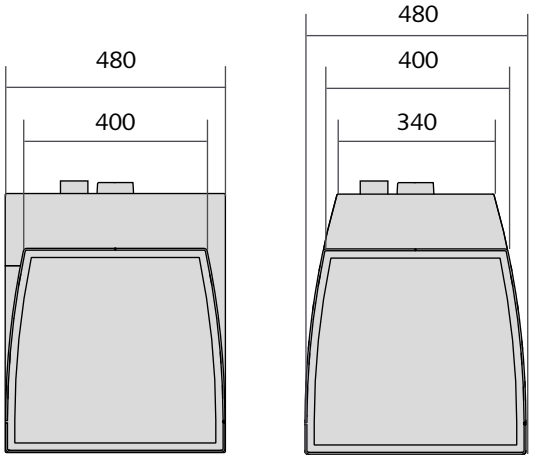

wood and “to be trimmed” version

sheet metal version

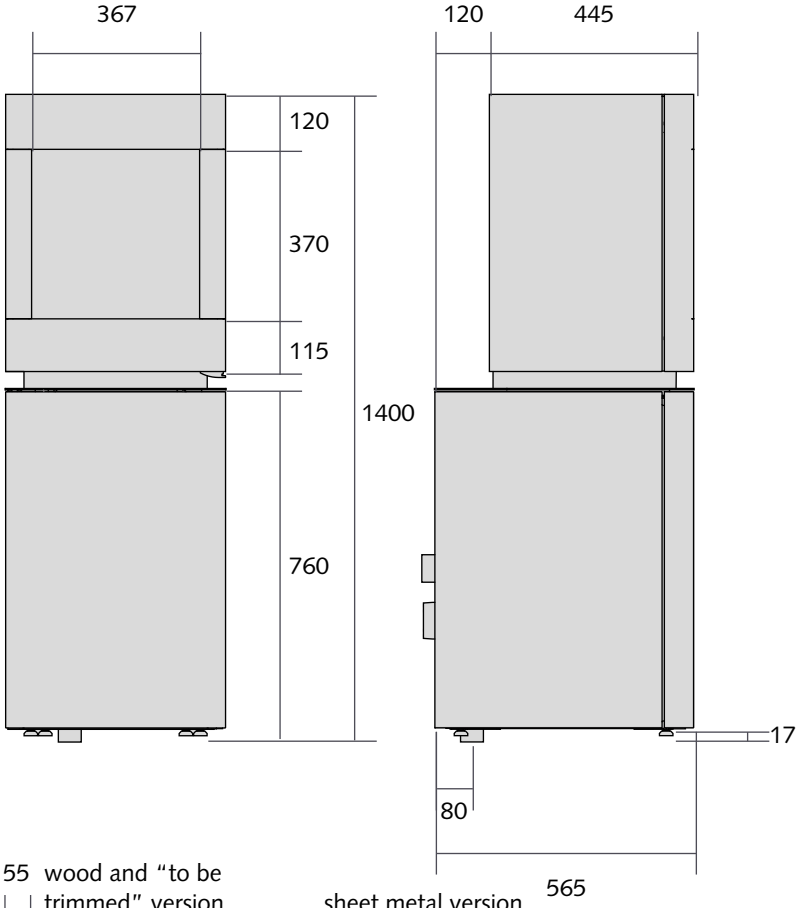

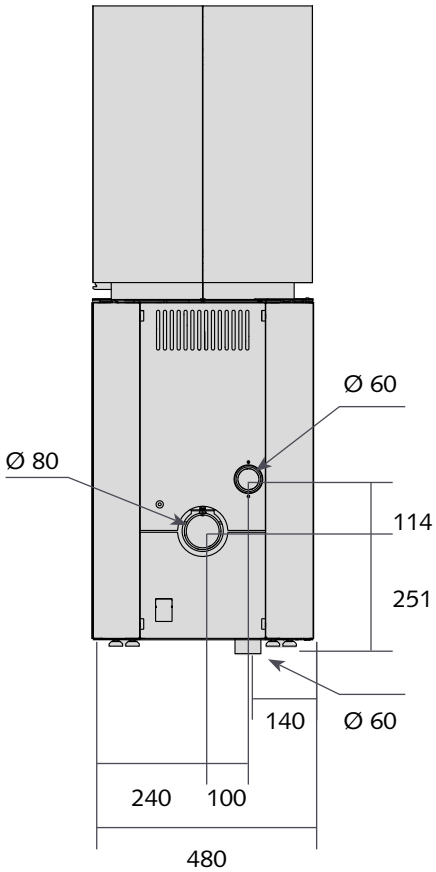

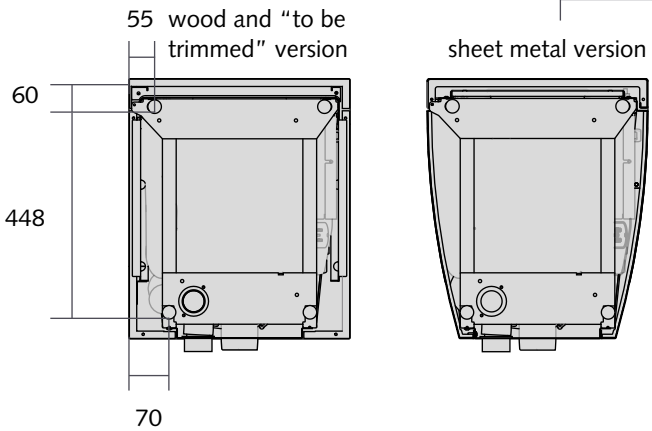

wood and “to be trimmed” version

sheet metal version

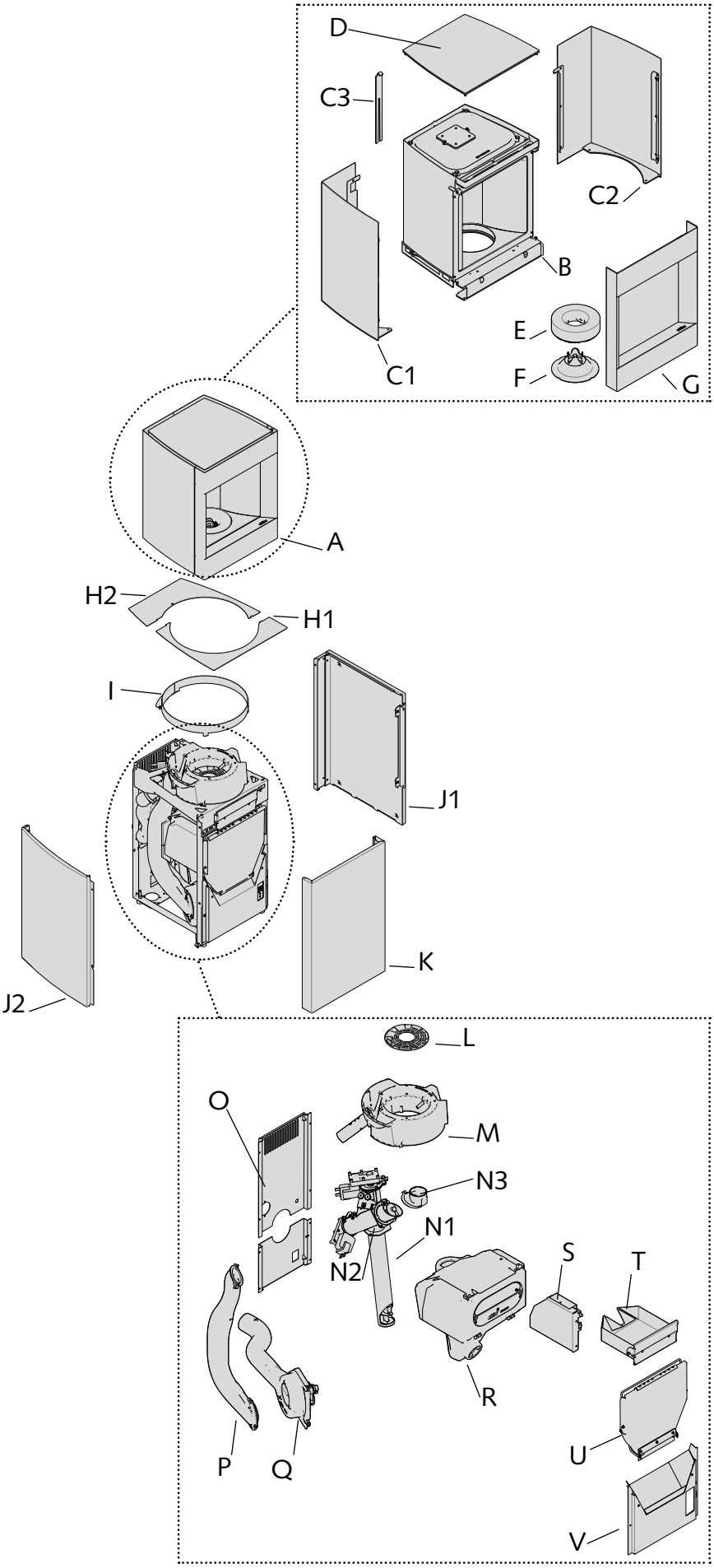

A. Lantern

B. Lantern frame

C1. Right-hand lantern facing
C2. Left-hand lantern facing
C3.Trim alignment key

D. Top shelf

E. Vermiculite Ring

F. Flame modeller

G. Lantern door

H.
H1. Rear shelf
H2. Front shelf

I. Collar

J.
J.1.1 Left facing (metal panel version)
J.1.2 Left facing (wood and to be trimmed version)
J.2.1 Right facing (metal panel version)

J.2.2 Right facing (wood and to be trimmed version)

K. Bottom door

L. Grilles

M. Burner casting

N1. Archimedes screw 1
N2. Archimedes screw 2
N3. Burner feed elbow

O. Rear panels

P. Smoke flue

Q. Fan body

R. Pellet hopper

S. Electronic card

T. Ashpan

U. Reloading hatch

V. Front hood with dust channel

*Facings are available in two versions. The illustration shows one side of each finish.

Facing trim kit - sizes of trim parts (option)

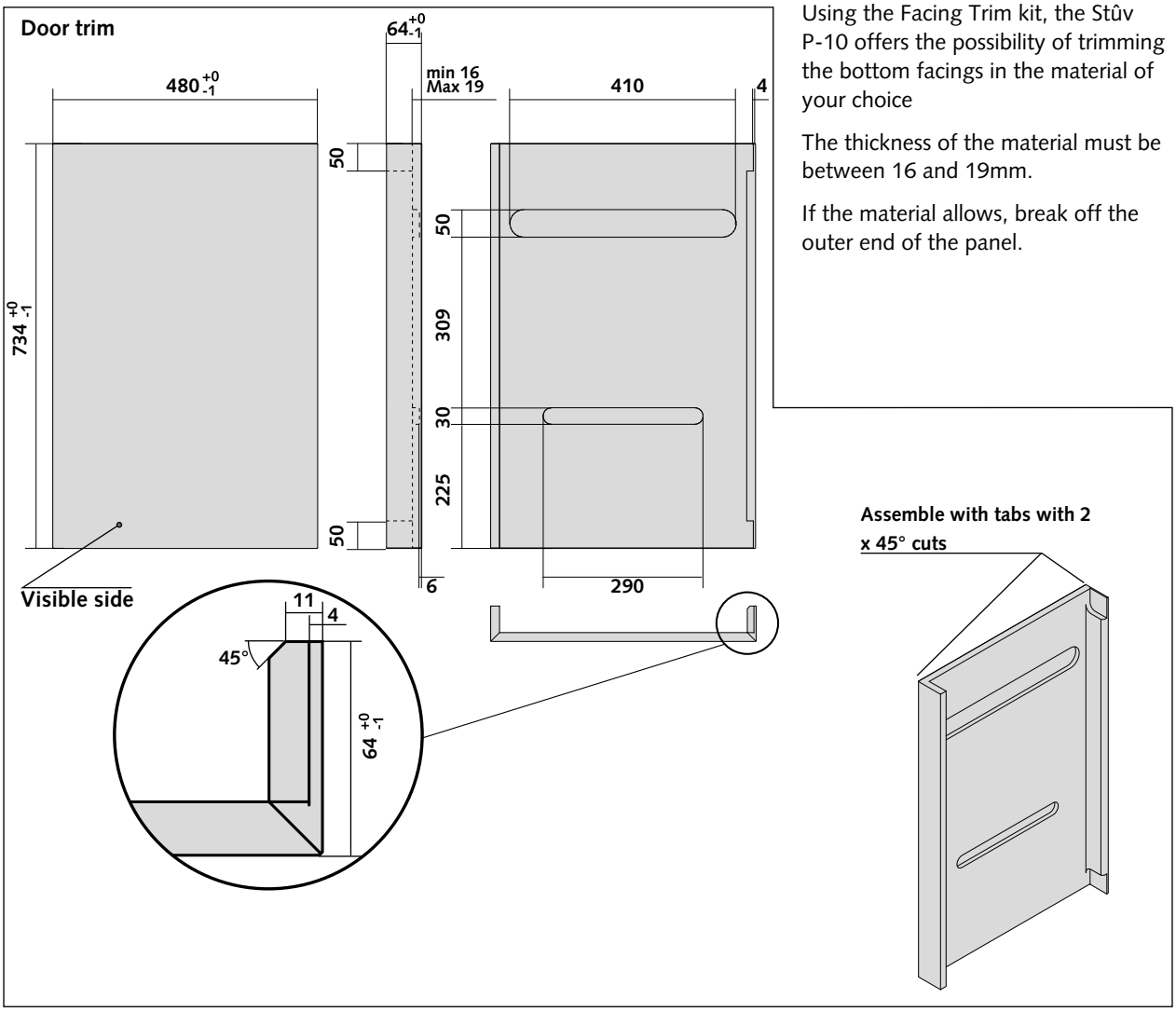

Using the Facing Trim kit, the Stûv P-10 offers the possibility of trimming the bottom facings in the material of your choice

The thickness of the material must be between 16 and 19mm.

If the material allows, break off the outer end of the panel.

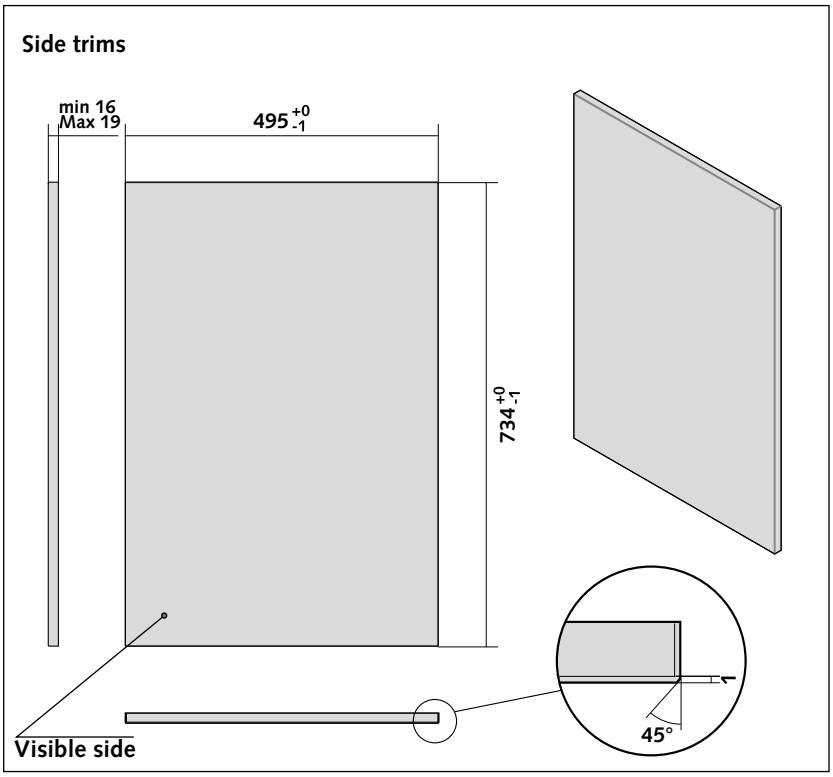

Precautions with respect to trim materials

There is a free choice of trim material, but it can reach a temperature of 85°. It is important to make sure that the trim material can withstand this temperature, in terms of both its structural integrity and the risk of the release of harmful substances.

The trim must not exceed;

- in the case of the door: 30kg

- in the case of the side facing panels: 25kg

Recommandations

The stove has to be installed in such a way as to facilitate access to sweep the stove, the connection duct and the smoke flue.
Provide for a sufficient clearance to be able to conduct operations on each of the sides of the appliance.

Only use the parts supplied or recommended by the manufacturer, Stûv s.a.

Combustion air inlet

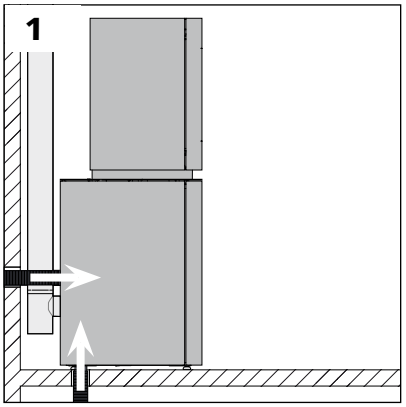

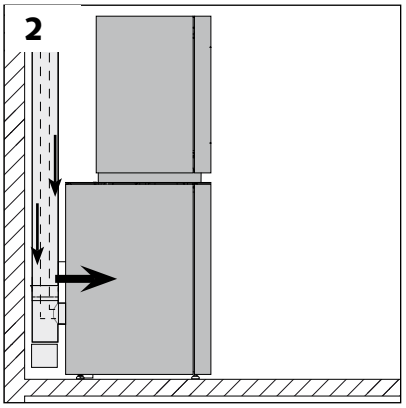

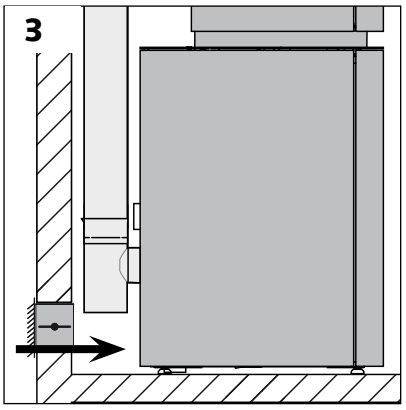

The stove requires air for combustion.

The ideal solution

The Stûv P-10 is designed to be connected directly to an outside air inlet (independent of the air in the house) by an independent flexible tube [diagram 1] or a concentric conduit [diagram 2]. We recommend one of these arrangements.

If the stove is not connected directly to an outside air inlet...

A sufficient air inlet (minimum 30 cm²) should ideally be created close to the stove.

This air inlet comes from a ventilated empty space, a ventilated room (cellar) or from outside [diagram 2].

Certain local regulations make these measures obligatory. Local and/or national regulations take precedence over our recommendations..

The duct that brings in outside air... (whether it is connected to the stove or not)

... will be protected on the outside by a grill the free passage section of which is at least equivalent to the section of the air inlet. Please note that the infiltration of water and the effect of the wind can damage the system.

... will be as short as possible to prevent pressure loss and to prevent making the house cold.

If you use our standard flexible Ø 60 mm flue, we recommend a maximum length of 5 m and no more than 4 elbows. If you exceed these guidelines, you must compensate with a greater diameter and/or a smoother duct.

Careful not to crush the flue.

Electrical power supply

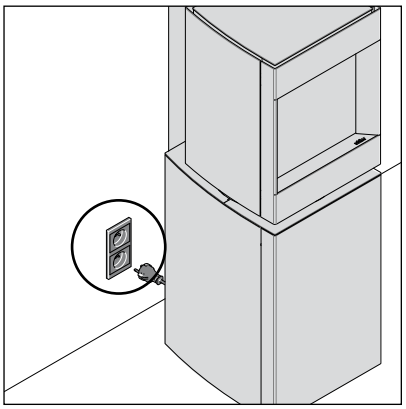

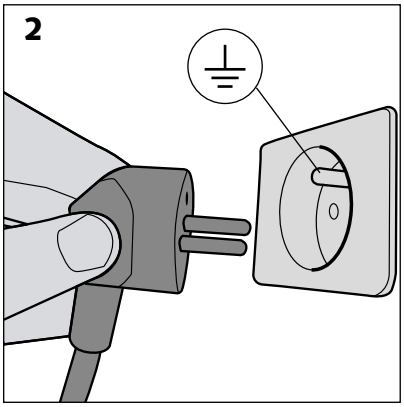

Provide for an electrical supply, ideally at the rear of the unit.

The wall plug must remain easy to access once the installation is completed.

Caution!
It is imperative that the plug and the electrical installation are earthed and are fitted with a differential circuit breaker.

Holding capacity of the structure

Ensure that the resistance of the floor is sufficiently strong to support the stove and the construction of the cladding. If in any doubt, please consult a specialist.

Safety distance to combustible materials

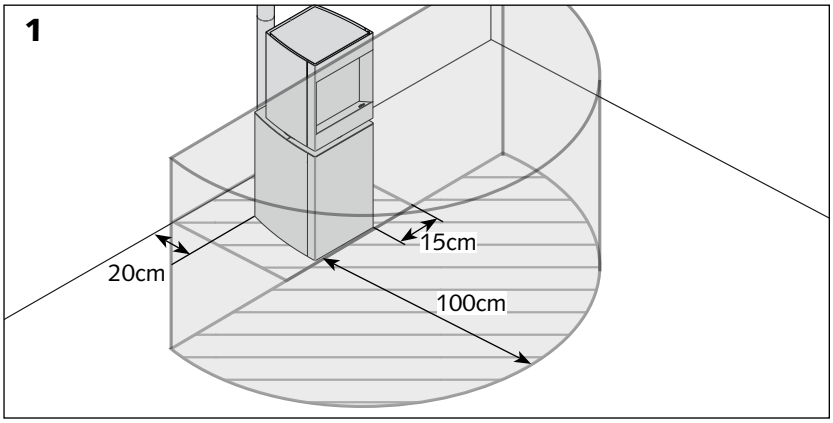

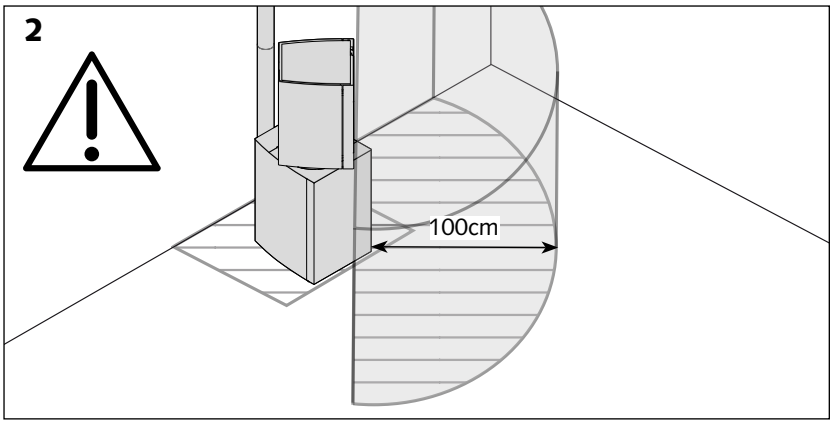

The heat radiated from the glass door and the walls may be significant.

Whichever way the stove is pointing, observe the safety distances related to combustible materials [diagram 1] or ensure that the materials exposed to radiated heat are resistant to high temperatures.

Caution!
Given that the lantern pivots 45° to the left and 45° to the right, the safety distance must follow the direction of the flame [diagram 2].

Avoid “heat traps” in the hood

If the stove is situated in a bell-shaped area (ex: a former hearth), this space must be ventilated to prevent "heat traps". Allow a clearance of at least 50 cm above the device.

Ensure the flue's dimensions meet local regulations and the applicable installation standards in line with good practice.

Basic information

For good draught, the stove must be suited to the flue (or vice versa).

An oversized flue is as detrimental to the smooth operation of the stove as an undersized flue.

As the Stûv P-10 is a highly efficient stove, the smoke flue must be of good quality. The flue must also be as straight and smooth as possible and insulated to encourage drawing and to prevent condensation.

The ideal solution is a flue built inside the building and thermally insulated. An outside flue without any insulation must be avoided.

The stove must never be connected to a smoke flue serving several systems.

Take care to avoid heat loss !

If several chimney flues are available, only use one. Cap unused flues top and bottom.

Standard outlet diameter

The use of flues that are 80 mm in diameter should be preferred.

Some flue configurations may require a different diameter than that provided as standard. Should this be the case, please consult your retailer

Special cases...

The maximum length of the horizontal parts is 2m with a minimum slope of 5%.

Maximum number of elbow joints:
> 3 x 90° elbow joints
> 6 x 45° elbow joints

Stûv recommends that each installation complies with installation standards EN 15287-1 or -2 and that a calculation note is drawn up in accordance with standard 13384-1 and its appendix to ensure that the appliance does not operate in a condensation regime. This calculation must include the appliance's target power range. Check that your flue complies with standards EN1856-1 and EN 14989-2, which specify the characteristics of metal flues.

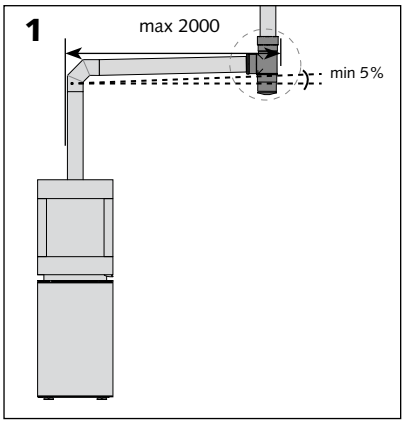

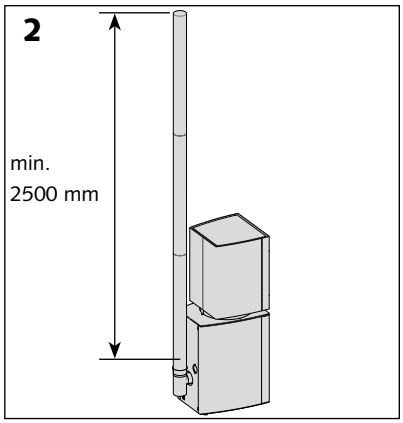

The length of the horizontal flue must be 2m at the most and with a minimum slope of 5%.

The minimum height of the flue must be 2.50 m.

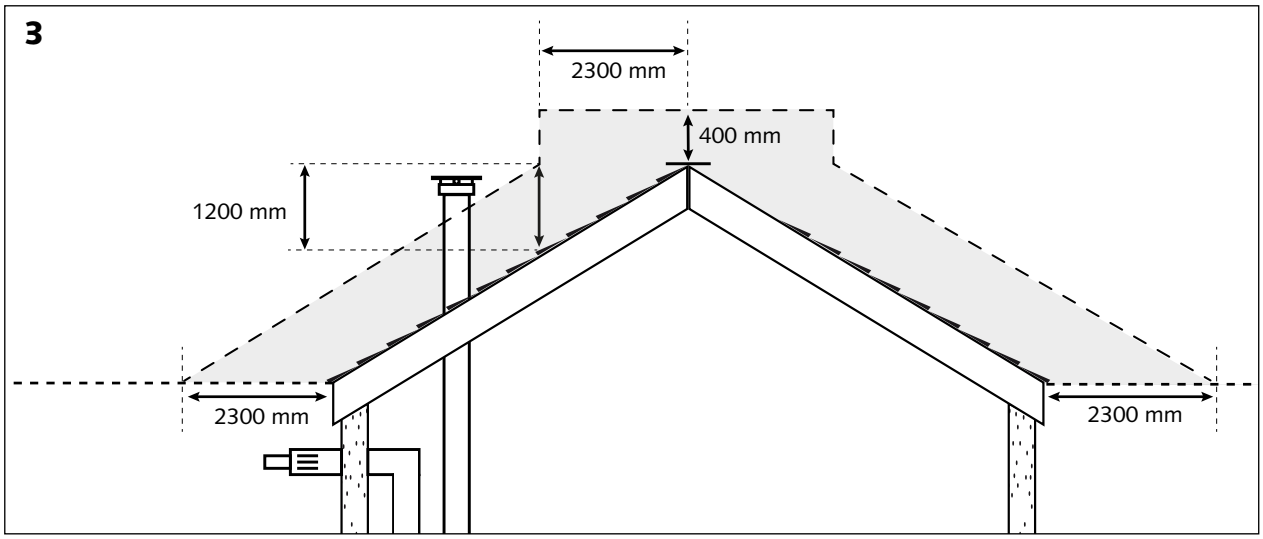

Authorized outlet [see Figure 3]

Flue type	*Zone 1*	*Zone 2*	*Zone 3*
concentric flues (Ø 80/130 only)	✓	✓	
all other flues	✓		

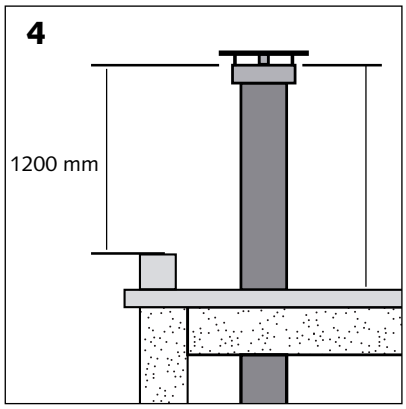

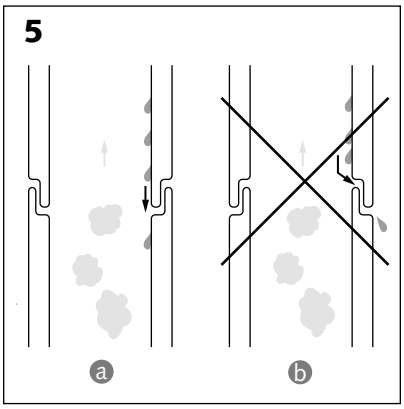

It is recommended that a flue is used whose outlet extends by at least 400 mm above the ridge of the roof [diagram 3] or by at least 1.2 m for a flat roof [diagram 4].

Air-tightness

The various components which make up the connection between the stove and the smoke flue and those which make up the flue itself have to be fitted so that they are airtight for the condensation [diagram 2/a] rather than the smoke [diagram 2/b].

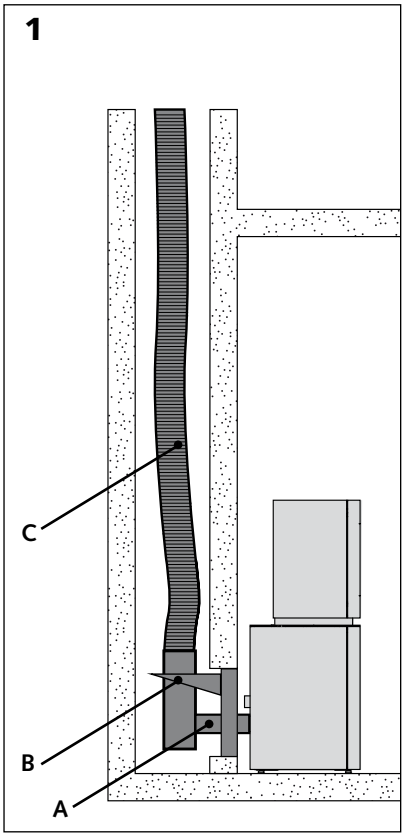

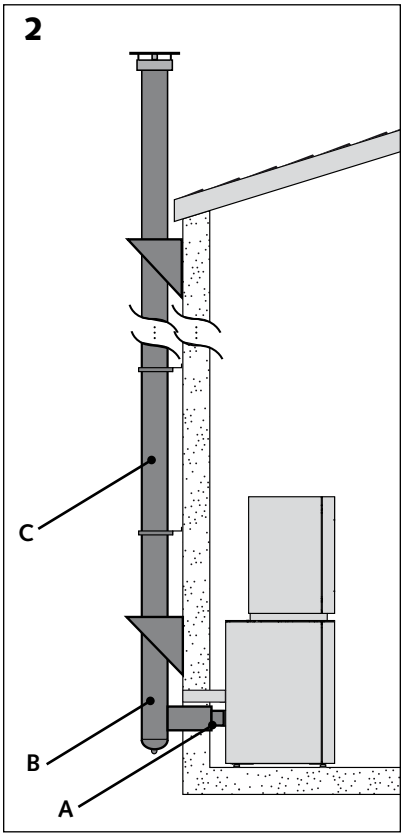

Connection to a masonry chimney [diagram 1].

A tube must be used in a masonry chimney to avoid condensation.

> Connect the single-wall connection duct [A] to a 90° tee-piece with a plug [B].

> Fit flexible ducting inside the chimney to tube it [C].

Connection to an outside insulated flue [diagram 2].

The outside flue must be insulated.

> Connect the single-wall connection duct [A] to a 90° double-walled tee-piece with a plug [B].

> Use double-wall stainless steel ducts [C] .

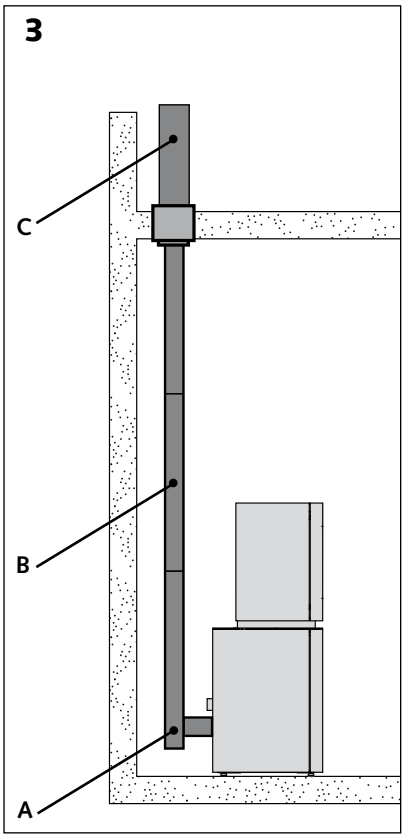

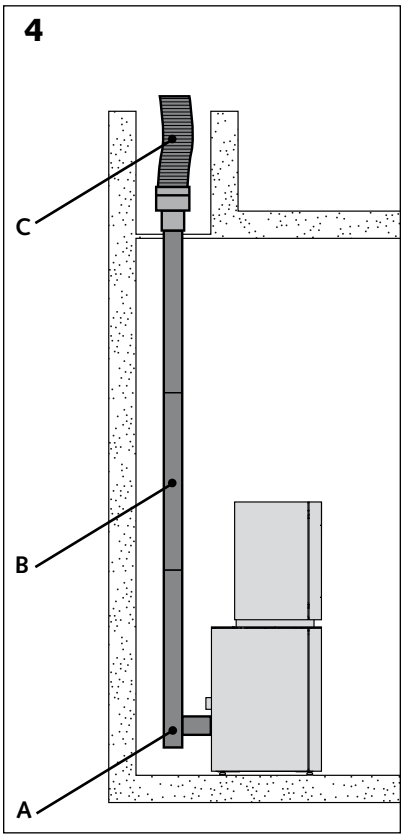

Connection through a new inside flue [diagram 3].

> Install a 90° tee-piece with plug [A].

> The connection duct may be single- or double-walled [B].

> Use insulated ducting from the ceiling of the room where the stove is installed [C].

Connection through an existing inside flue [diagram 4].

A tube must be used in an existing chimney to avoid any condensation problems.

> Install a 90° tee-piece with plug [A].

> The connection duct may be single- or double-walled [B].

> Fit flexible ducting inside the chimney to tube it [C].

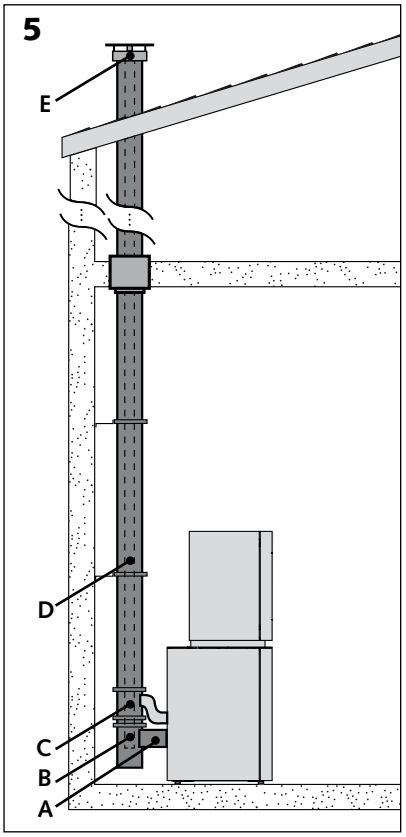

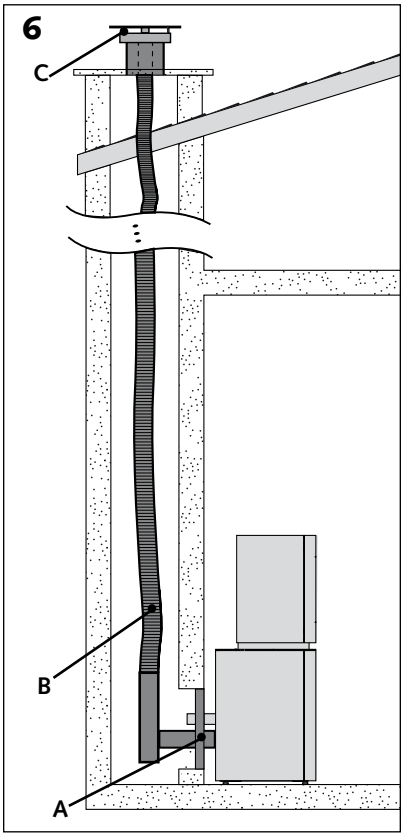

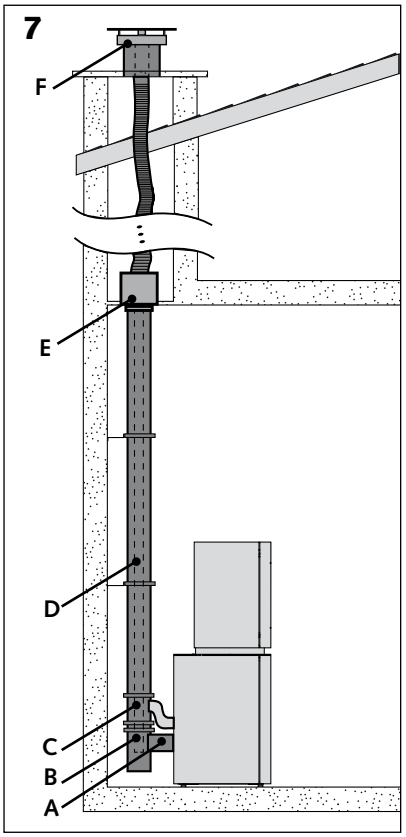

Evacuation of combustion products via a PGI Poujoulat Ø 80/130 or PLA Modinox Ø 80/125 concentric flue.

NB: concentric flues are only to be installed inside the building.

Connection to a new flue [diagram 1].

> Connect the connection adapter (Poujoulat: 37080466 / Modinox: 2PLAMAFF80) [A] to a 90° concentric T connection [B].

> Install an air intake to feed the air required for combustion into the appliance [C].

> Use concentric flues continued [D].

> Install a concentric cap plate in zone 1 or zone 2 [E].

Connection via a masonry chimney [diagram 2].

In this configuration, the air required for combustion comes from the gap between the flue and existing masonry.

> Install the Poujoulat: KRFL PAH PGI / Modinox: 2PLAADA880 kit [A].

> Line the chimney with a flexible flue up to the concentric cap plate [C].

Connection via an existing interior flue [diagram 3].

> Connect the connection adapter (Poujoulat: 37080466 / Modinox: 2PLAMAFF80) [A] to a 90° concentric T connection [B].

> Install an air intake (Poujoulat: EDPA / Modinox: 2PLAT090A680) to feed the air required for combustion into the appliance [C].

> Use concentric flues [D].

> Install the "ceiling offtake" kit Poujoulat: : KFRL PGI / Modinox: 2PLAADA780

> Line the chimney with a flexible flue up to the concentric cap plate [F].

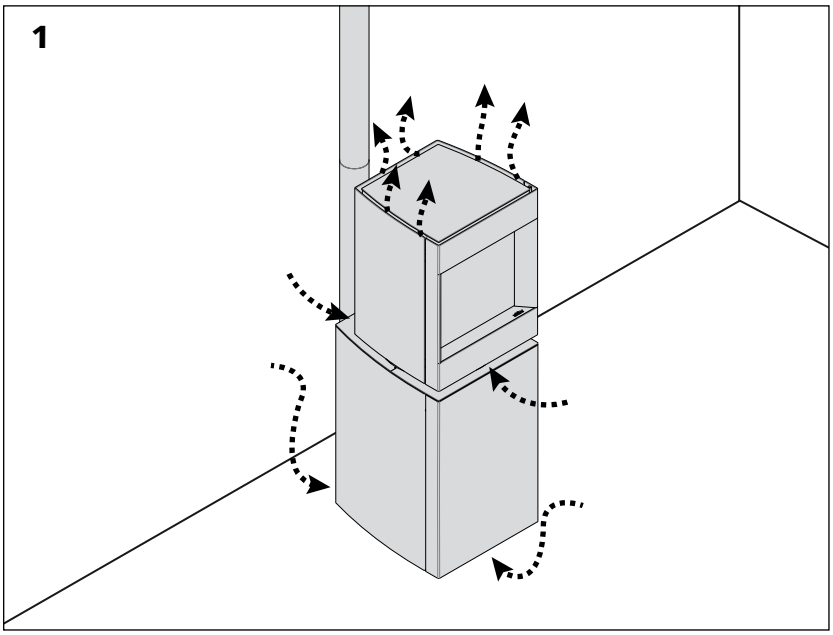

The circulation of convection air in the Stûv P-10 is done naturally.

The air intake is in the base of the unit and under the lantern. Hot air comes out of the top part of the product [diagram 1].

Ensure that the air ducts are always kept free!

This circulation of convection air also has an impact on the thermostat regulating the appliance. To operate correctly, place the remote control in the room where the Stûv P-10 is located but not too close to the stove or too exposed to sunlight.

On taking delivery of the equipment

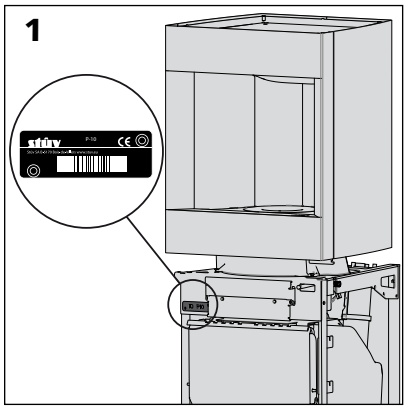

Please note !

When you take delivery of the stove, please check that the glass has not been broken during transport. The guarantee only covers damage caused during transport if mentioned on the delivery note.

Accessories

If accessories have been ordered, they can be found around the stove or its packaging. Check receipt of these.

Complaints

In the event of a complaint, always quote the serial number which can be seen on the stove [diagram 1].

Unpacking

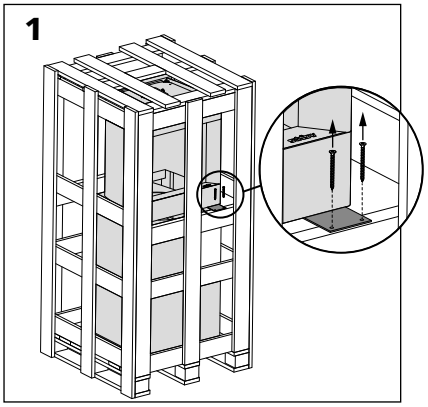

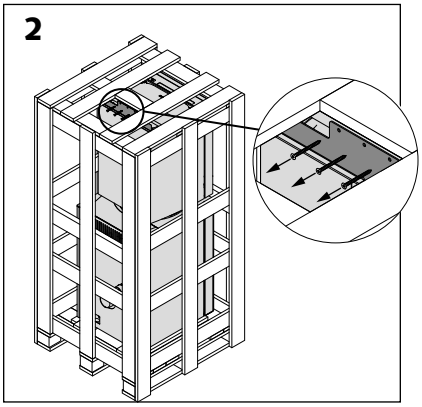

> Unscrew the five screws that are holding the stove to the front and top pallets [diagrams 1 and 2].

> Disassemble the pallet, starting from the top.

> Unhook each side with a crowbar.

> Unscrew the three screws that are holding the stove on the pallet [diagrams 3, 4 and 5].

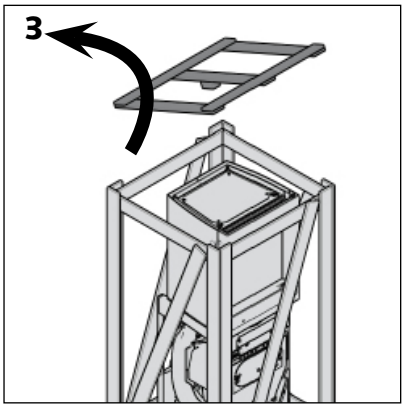

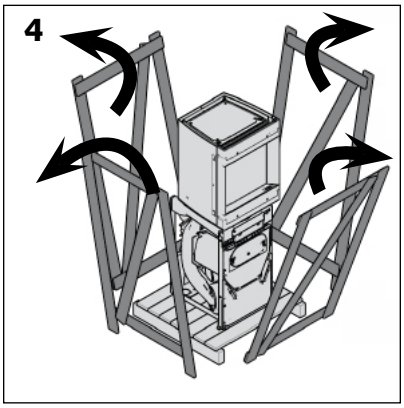

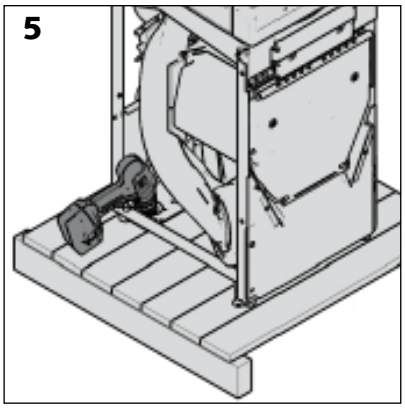

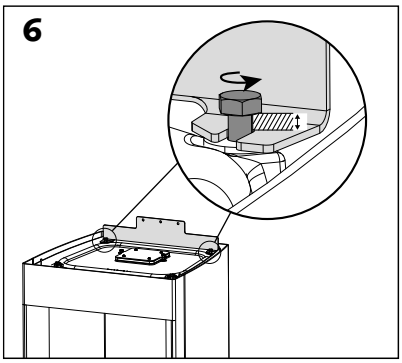

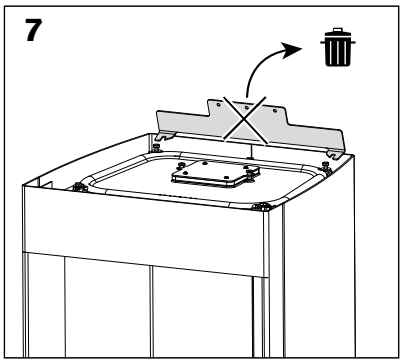

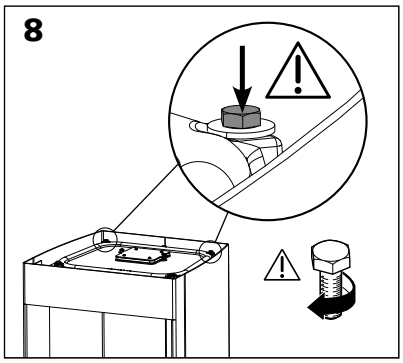

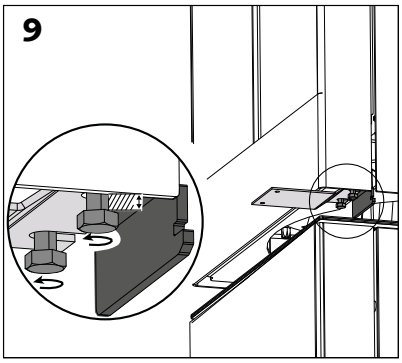

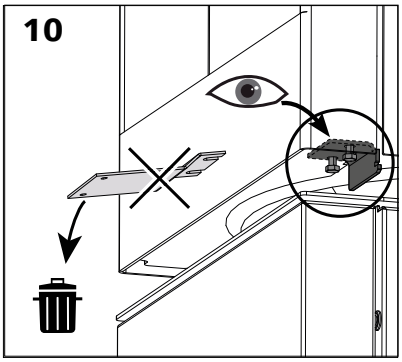

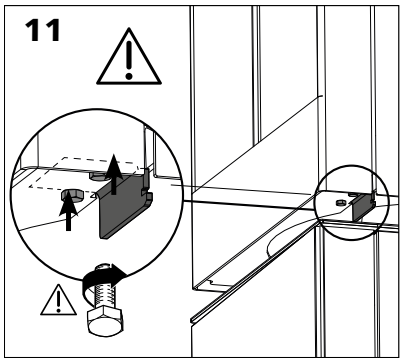

> Unscrew the 4 screws holding the mounting plates to the stove slightly [diagrams 6 and 9].

> Remove and discard the 2 fixing plates [diagrams 7 and 10].
⚠ **Discard only these 2 plates (shown in light grey)! Retighten the remaining plate to its original position [drawing 11].**

> ⚠ **It is imperative to tighten the 4 screws on the stove to ensure a good seal! Tighten the 4 screws on the stove to ensure a good seal! [diagrams 8 and 11].**

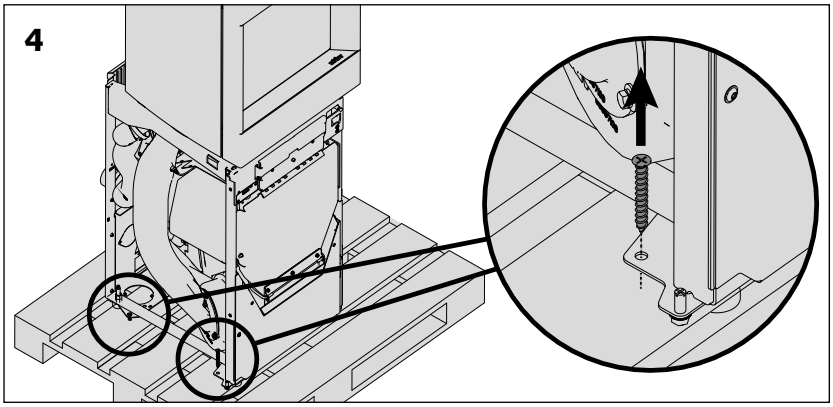

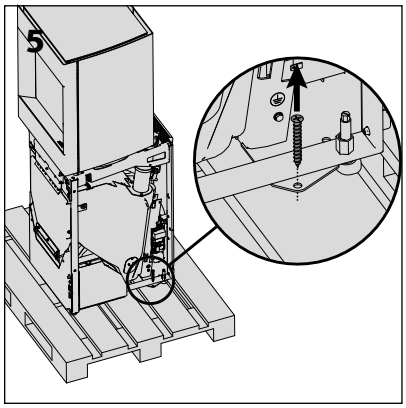

Transporting the stove

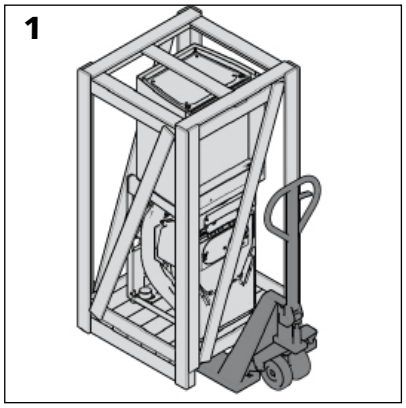

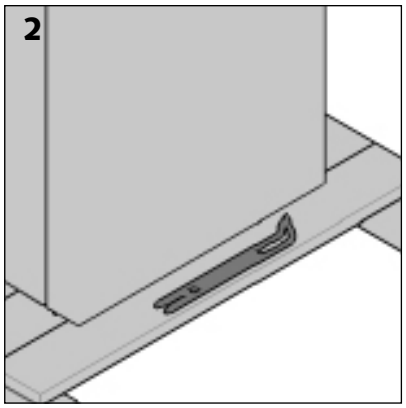

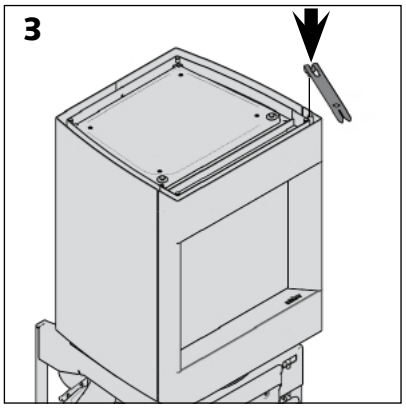

Please note!

The paint is not oven baked and is therefore relatively fragile but will harden after being heated a few times. Handle the system with care when installing.

Moving

While the stove is still packaged, you can use a pallet loader [diagram 1] or a hand-lift truck [diagram 8].

To use a trolley:

> unhook the door of the lantern [diagrams 4, 5 & 7].

Note:
During this first opening of the appliance door, remove the box contained in the combustion chamber [Diagram 6]. Check the contents of the box (see chapter “checking the contents of the combustion chamber").

> Put protection on the trolley (e.g. cover, cardboard, etc.).

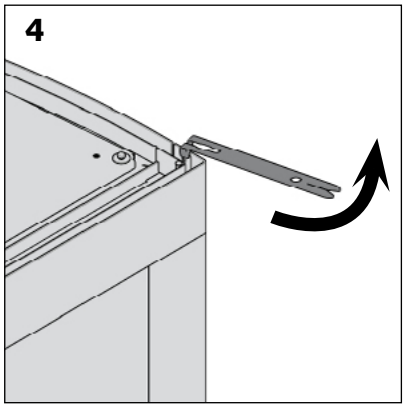

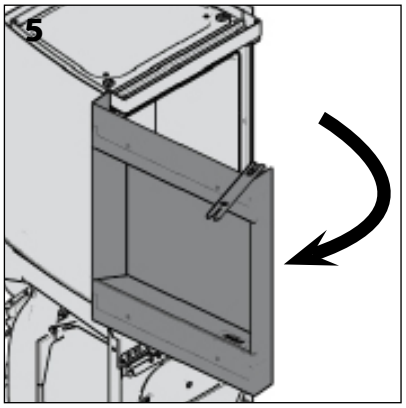

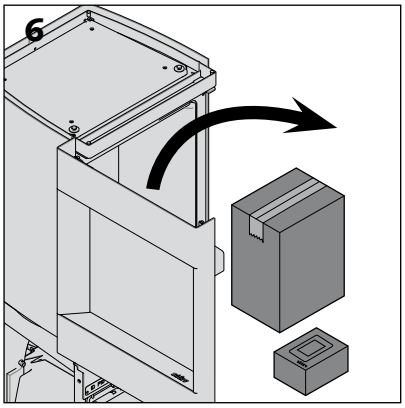

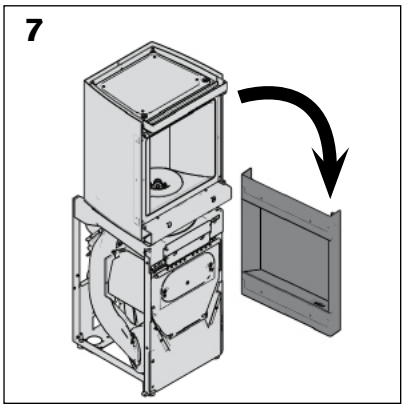

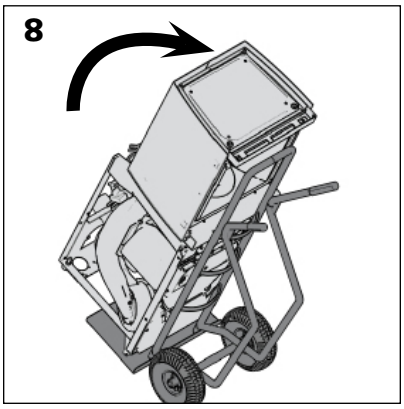

> Take hold of the stove by the front.

Caution!
When you receive the appliance, the top and bottom parts are joined using the lantern's locking screws. Later in this chapter we will explain how to remove these screws which are only used for transport. For any subsequent transport, replace at least 2 of the 3 screws or move the top and bottom parts separately.

> Bring the Stûv P-10 close to its final location.

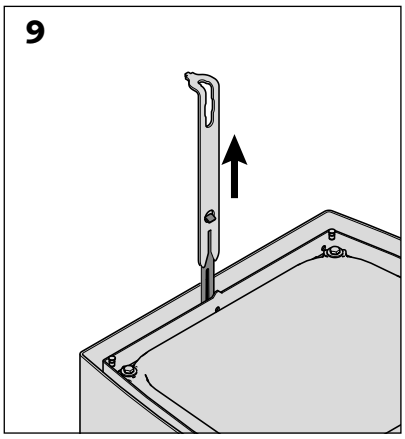

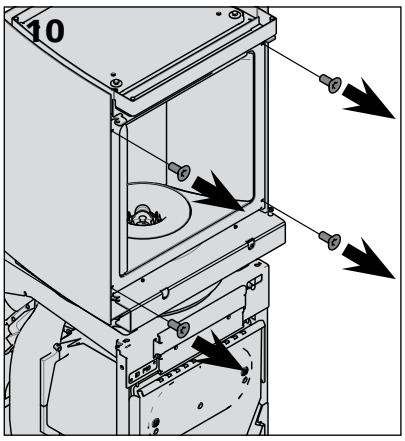

If the conditions so require, it is possible to make the stove lighter by separating the top part from the bottom part of the Stûv P-10.

> Remove the trim alignment key with the cool handle [figure 9].

> Remove the trim from the top part [figures 10, 11 and 12].

> Remove the vermiculite ring [diagram 13 & 14].

> Remove the flame modeller. Use the central grip point [diagram 15].

> Remove and take away the upper part of the stove.

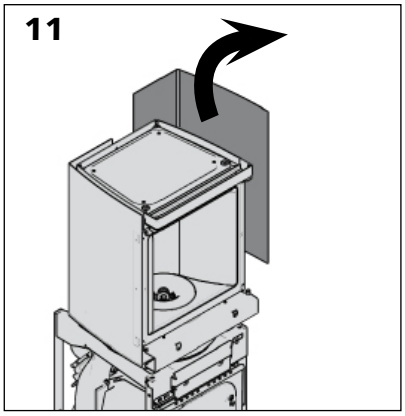

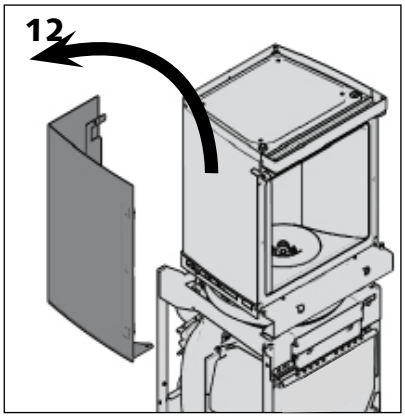

Caution!
Each part is heavy, so make sure that there are two persons to hold these assemblies.

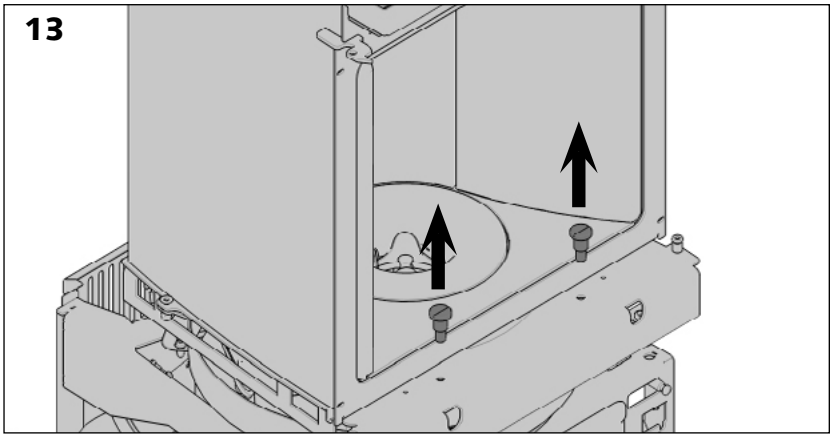

Transporting the stove

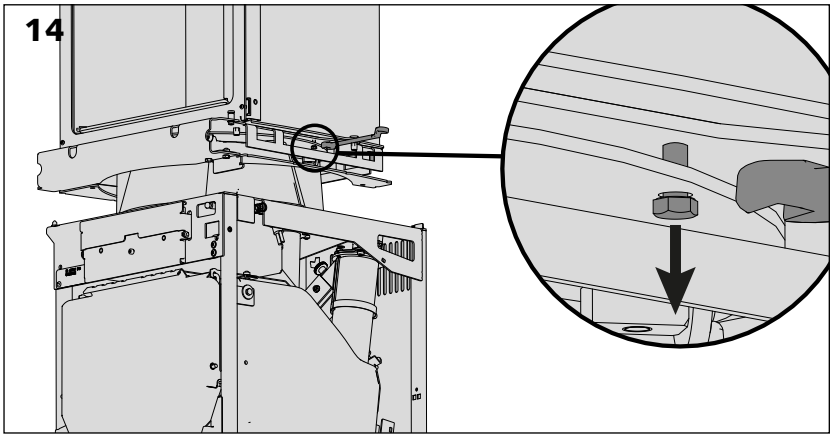

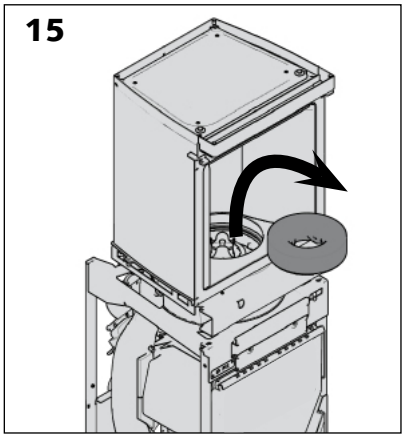

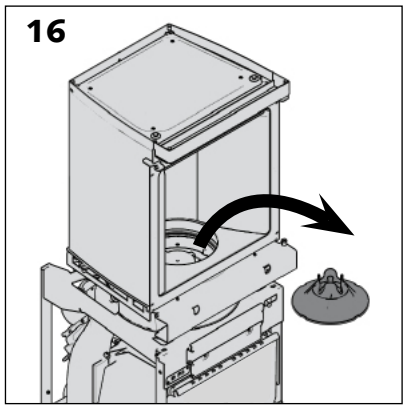

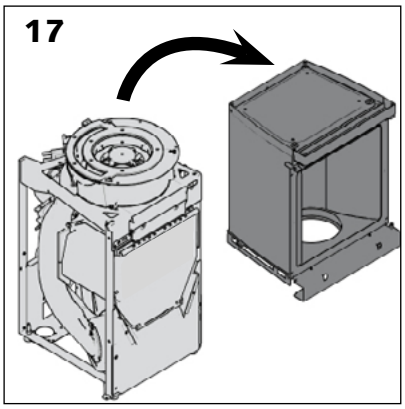

Positioning of the stove

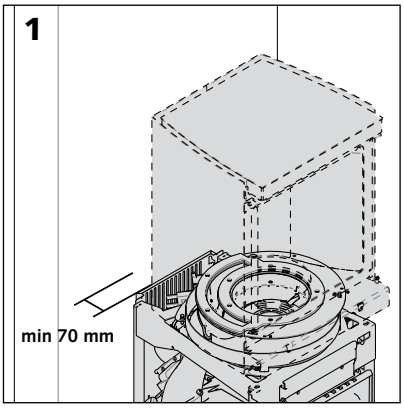

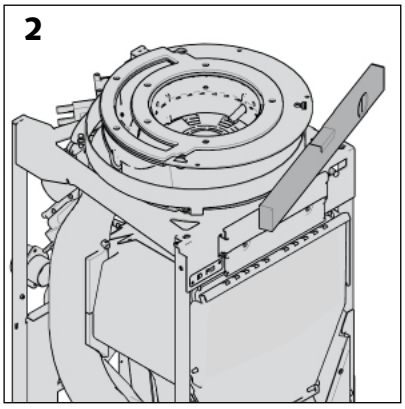

> Position the stove in its final position

> Leave at least 70 mm between the back of the unit and the wall at the rear.

> Use a spirit level on the frame to ensure that the appliance is positioned correctly (this will have an impact on the different connections).

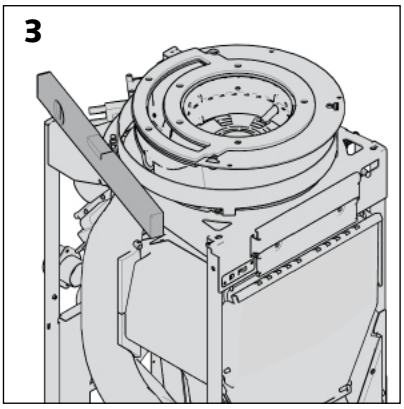

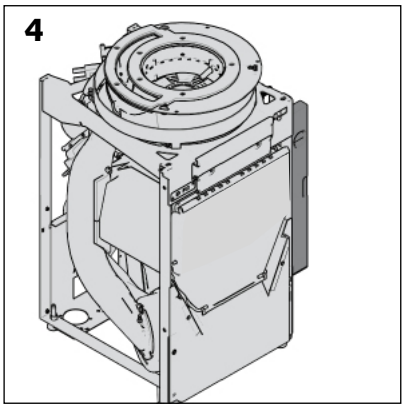

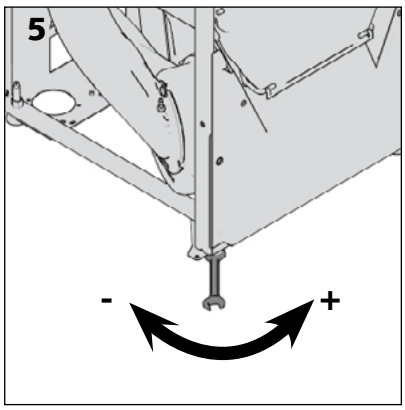

Caution!
Do not go below the minimum height from the ground to the bottom of the unit (feet screwed to the maximum).

Checking the contents of the combustion chamber

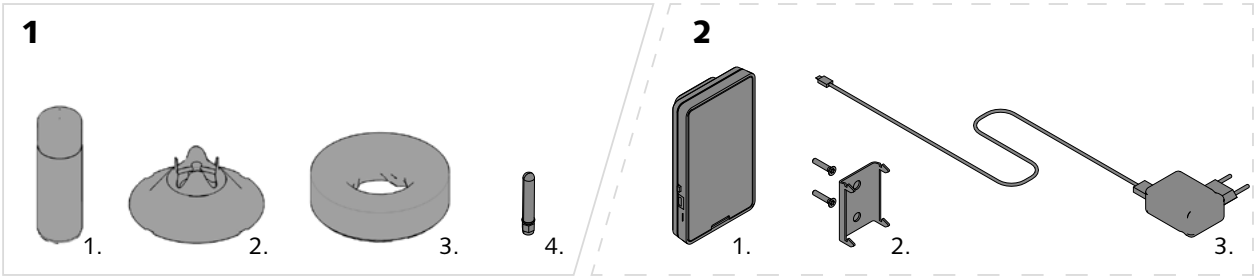

In the combustion chamber you will find:

A box containing:

> a can of paint (1.1)

> the flame shaper (1.2)

> the vermiculite ring (1.3)

> a screw-on antenna (1.4)

> instructions for installing and using the device.

If you have chosen the remote control option, you will also find there:

> the remote control (2.1)

> the wall mount for the remote control (2.2)

> The charger for the remote control (2.3)

Remote control start-up (optional)

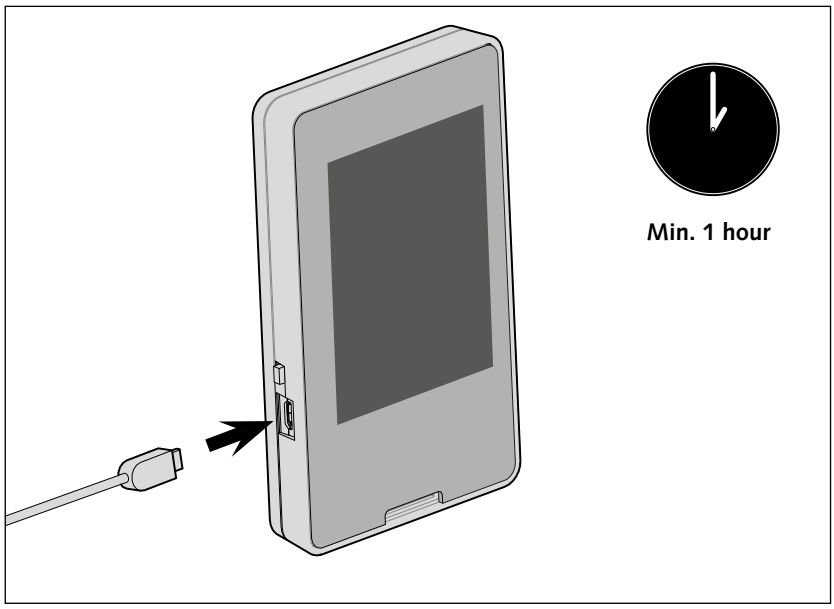

The remote control is provided ONLY as an option.

If you ordered this option, connect the remote control using the supplied charging cable.

⚠ **ATTENTION: The first charge must last at least 1 hour!**

The control unit is operational as soon as it is connected to the mains.

> The rest of the procedure for installing the remote control will be described later, at start up.

Connection with outside air (option)

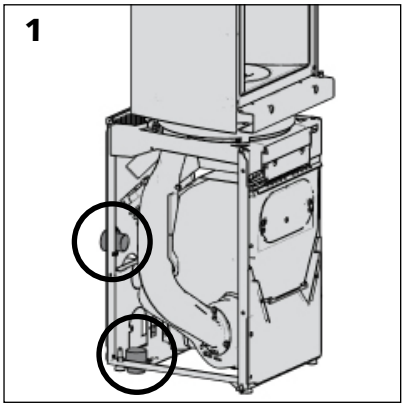

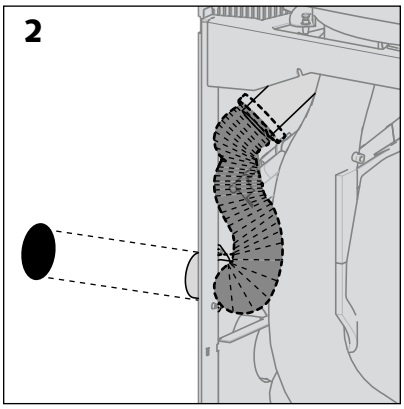

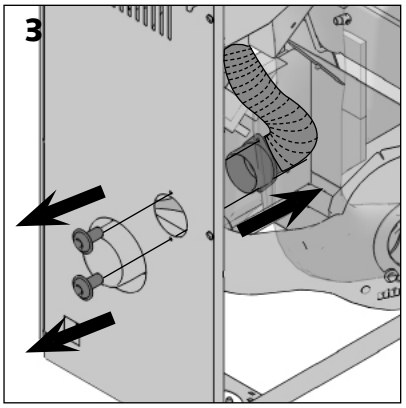

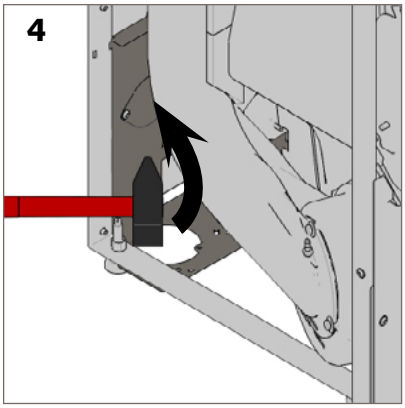

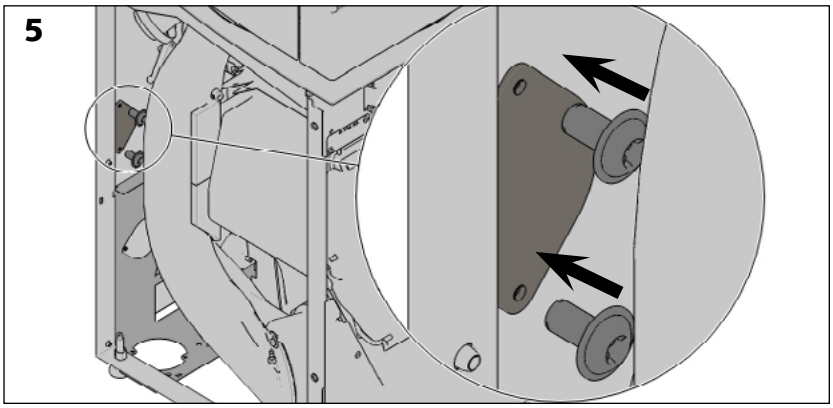

The diameter of the duct should be 60 mm, it can be connected either from the rear from the ground [diagram 1].

The duct must not be longer than 5 metres and must not have more than 4 elbows.

After factory adjustments, the flange is connected to the back of the device [figure 2].

To install the air intake through the bottom of the stove:

> unscrew the flange from the back of the device [figure 3]

> break the pre-cut section at the bottom of the sheet [figure 4]

> position this piece of the sheet to block the opening of the rear trim [figure 5]

> Pull the hose conveying the outside air into the appliance [diagram 6]

> Secure the hose to the flange

> Screw the flange to the appliance from the inside of the stove [diagram 7].

If you are not connecting your stove to the outside air, provide for an air intake with a cross-section greater than 30 cm² in the room where the stove is installed.

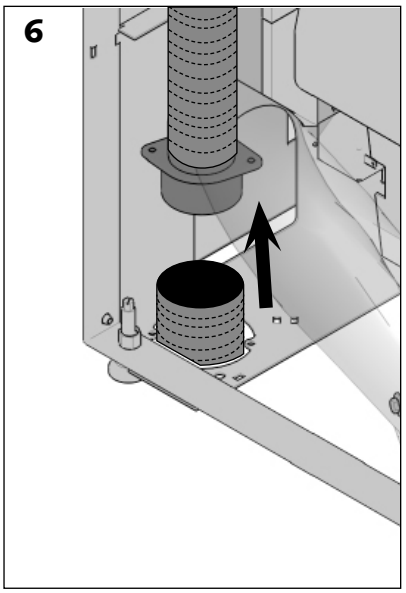

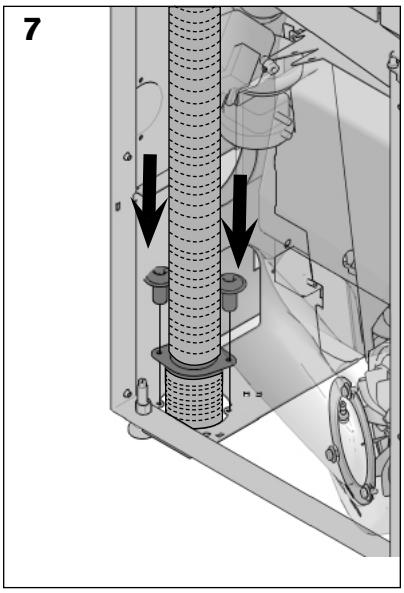

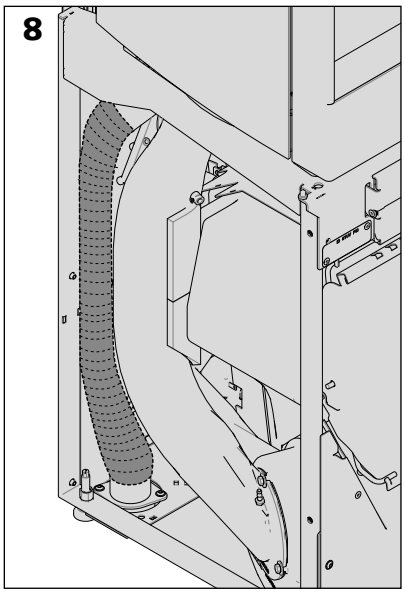

Connection to the smoke flue

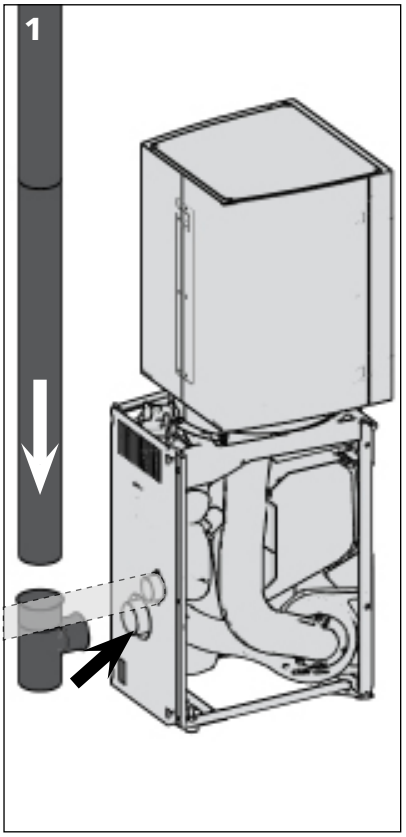

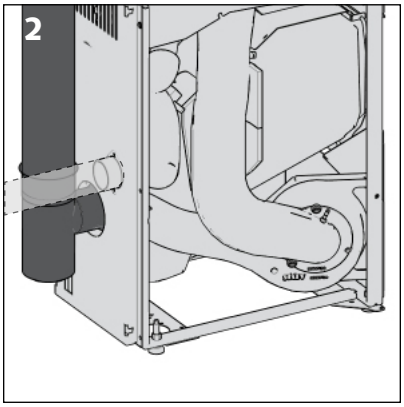

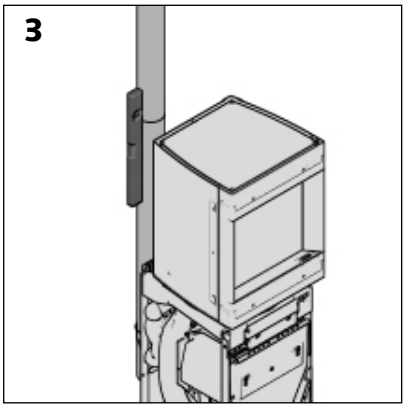

The 80 mm-diameter ducting connects to the centre of the back of the appliance.

We strongly advise that a 90° tee-piece is fitted along with a soot box for easy collection and removal of any condensate.

Warning!
Do not forget to order a female connector to be able to connect the appliance's 80mm ∅ smoke outlet to the 80mm ∅ connecting flue.

Final assembly

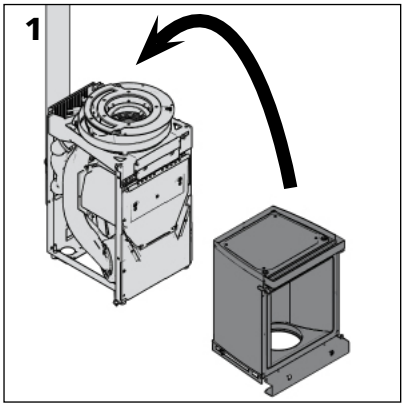

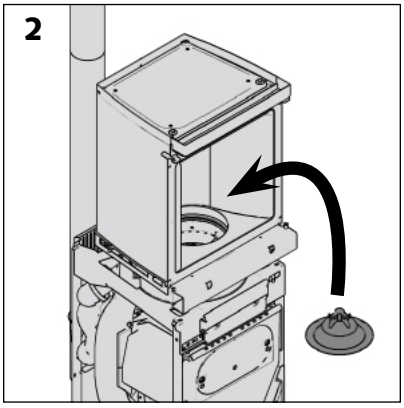

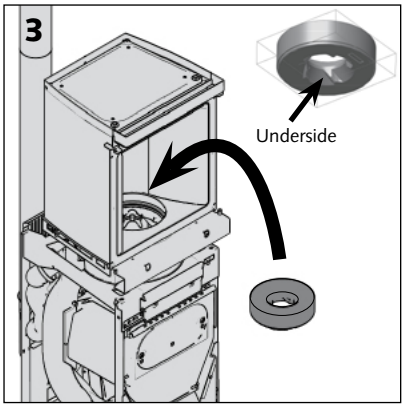

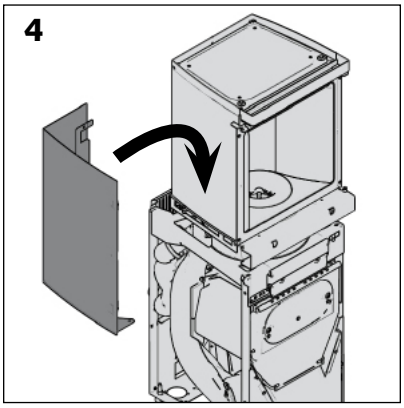

If the top part of the appliance has been removed:

> Replace the lantern on the base of the Stûv P-10

> Replace the flame modeller.
The notches on the modeller (external edges) must match up with the lug on the burner.

> Replace the vermiculite ring.
Caution!
Take care to replace the vermiculite ring in the correct position. The grooved portions represent the underside of the ring [diagram 3].

> Replace the lantern facings.

> Fit the door of the combustion chamber.

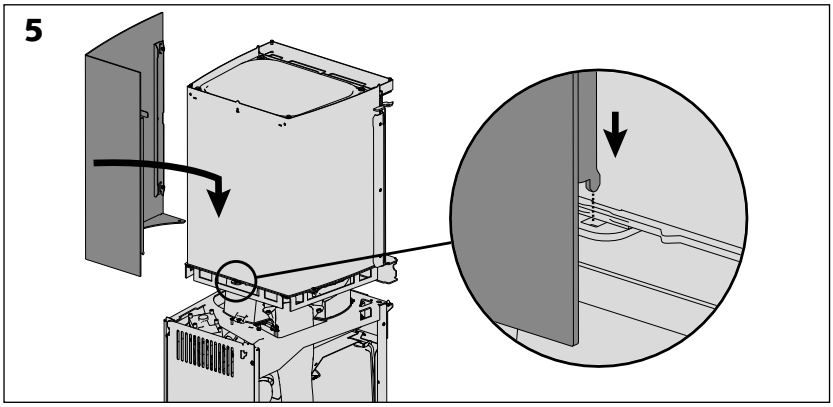
5

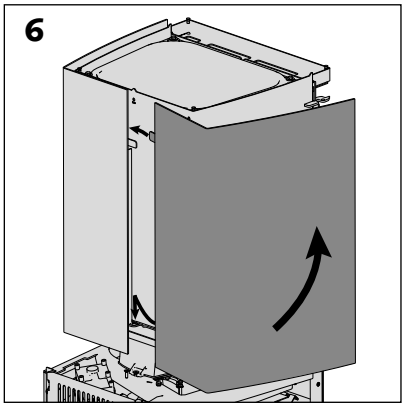
6

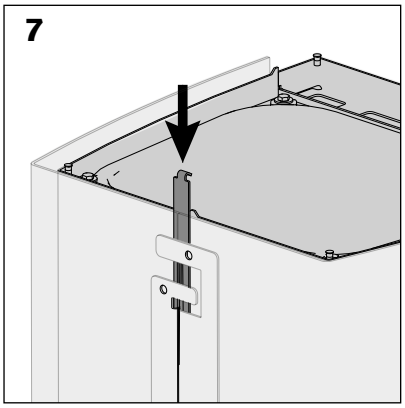
7

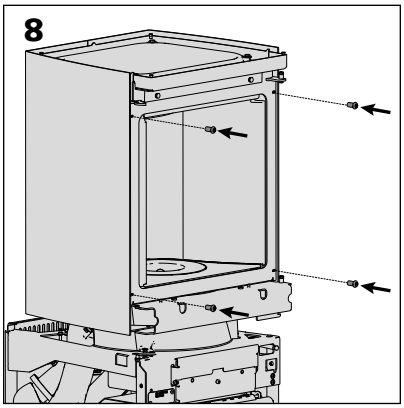
8

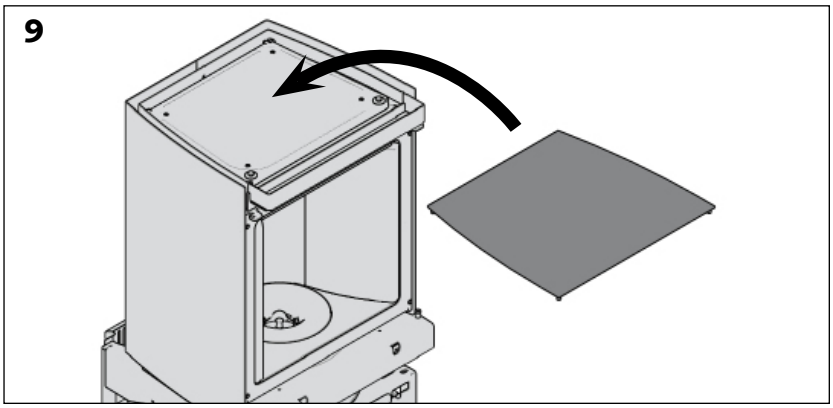
9

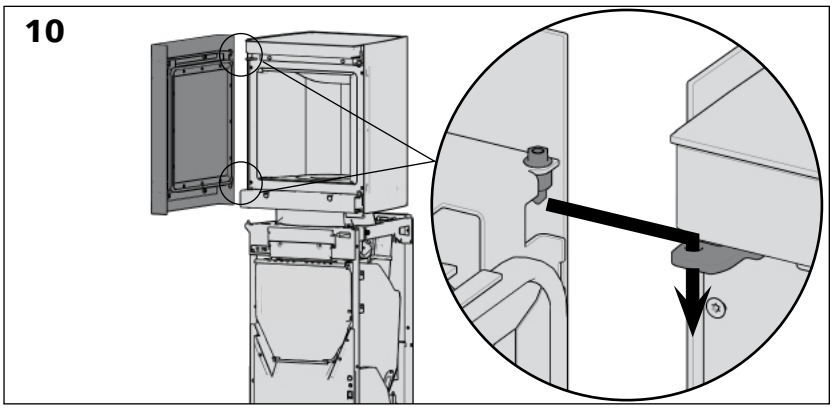
10

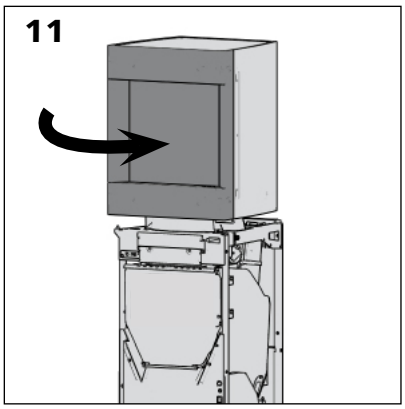
11

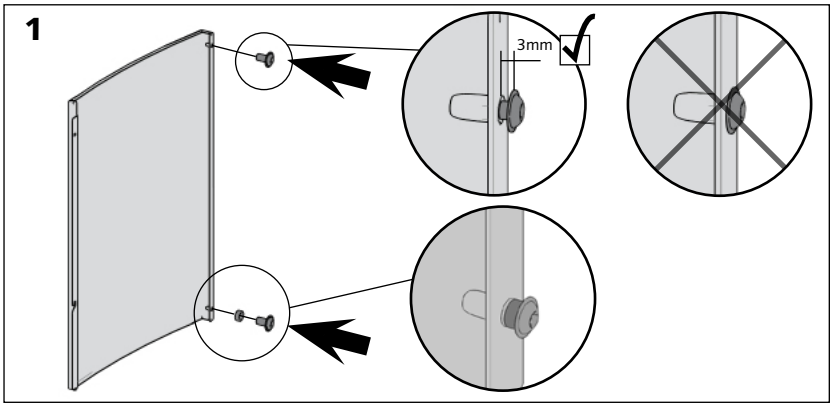

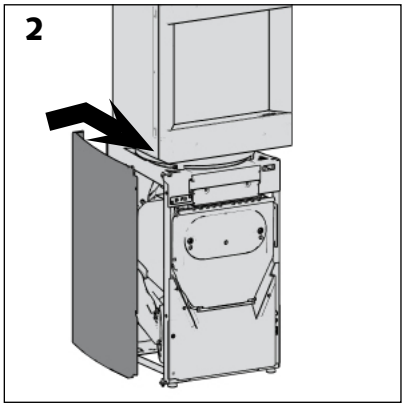

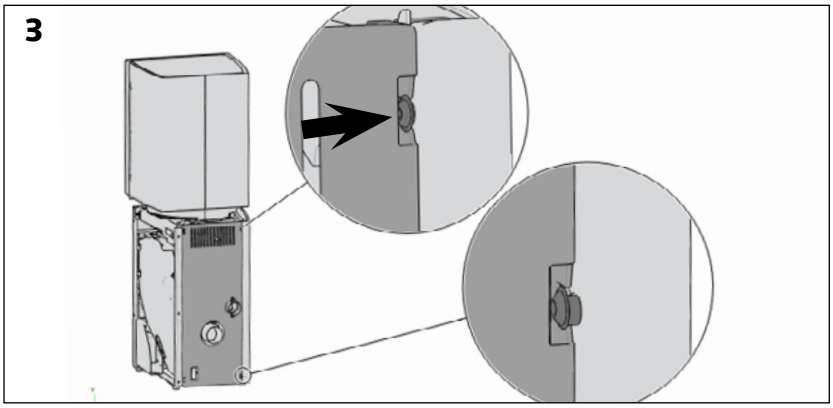

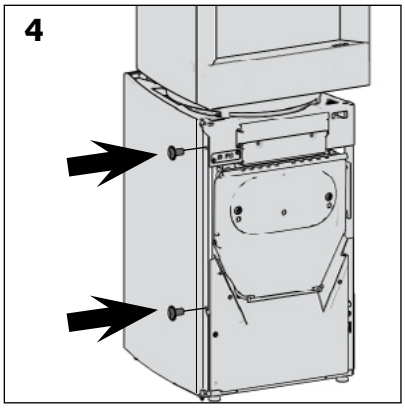

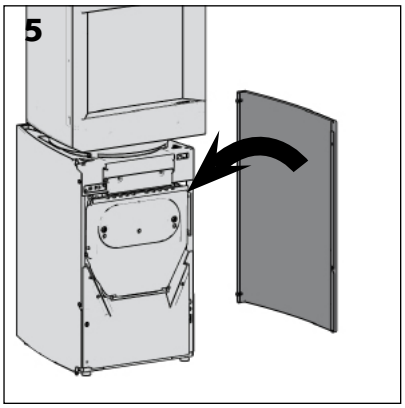

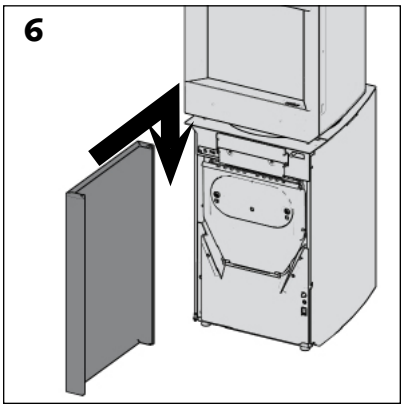

> The screws fixing the side facing panels must be fully tightened to prevent vibration noise [diagrams 3 & 4]

> Repeat steps 1 to 4 for the right trim [figure 5].

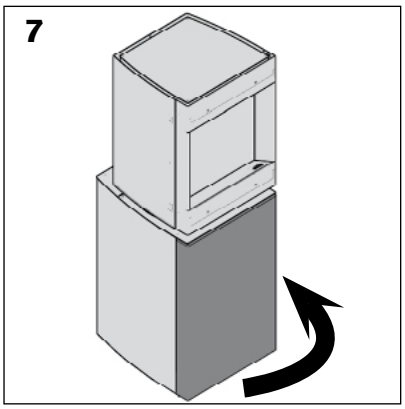

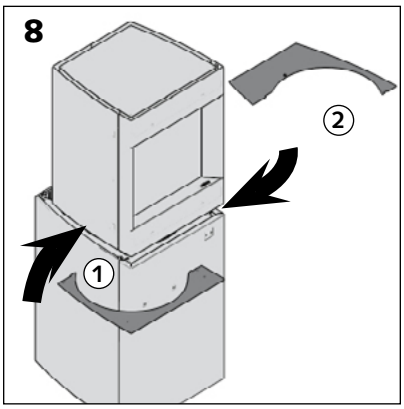

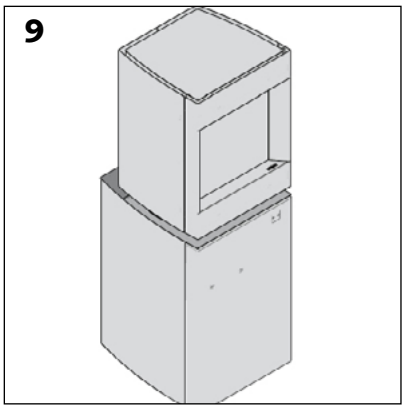

Final assembly - positioning the lower trims on the wooden version

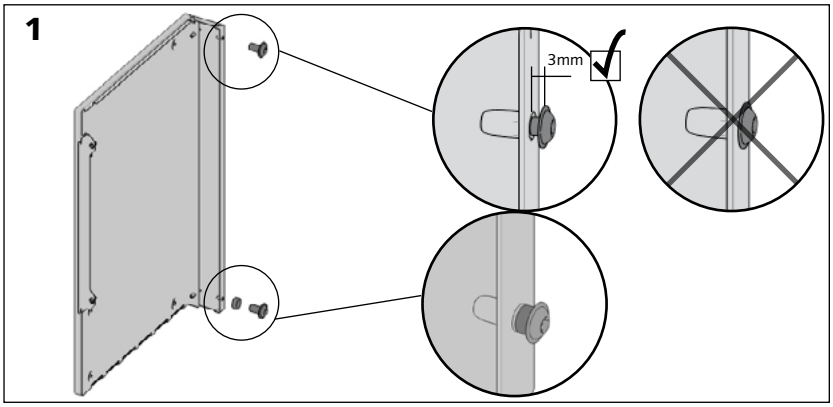

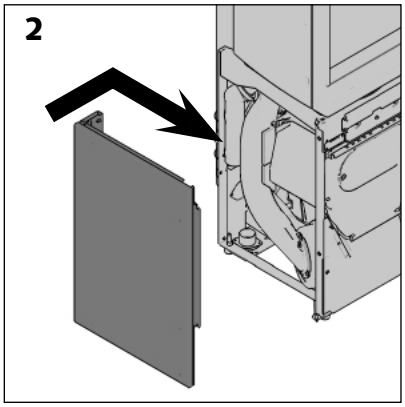

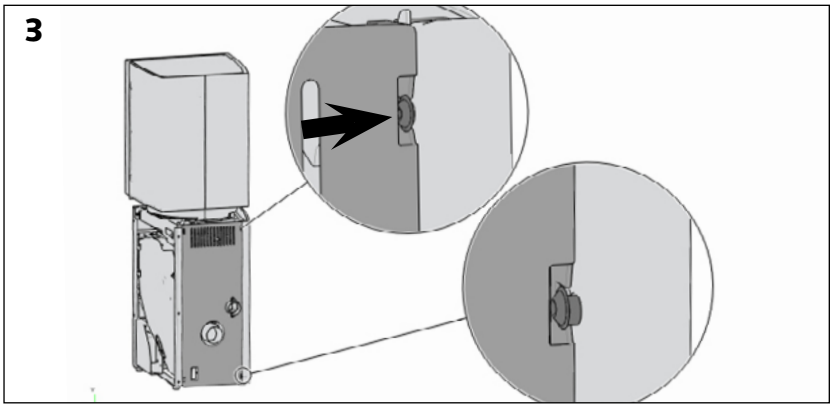

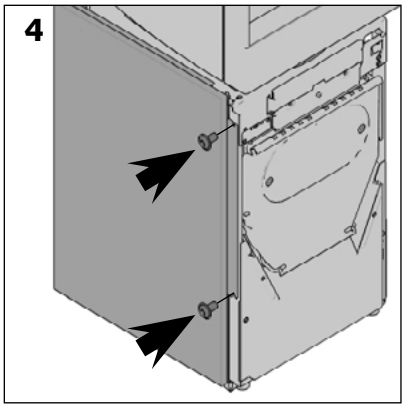

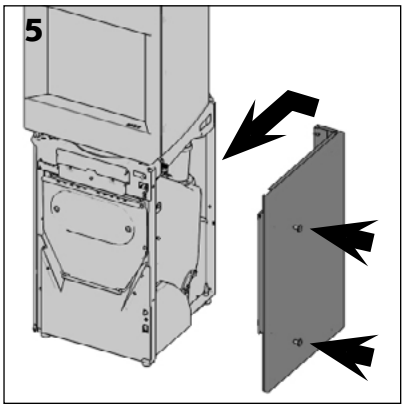

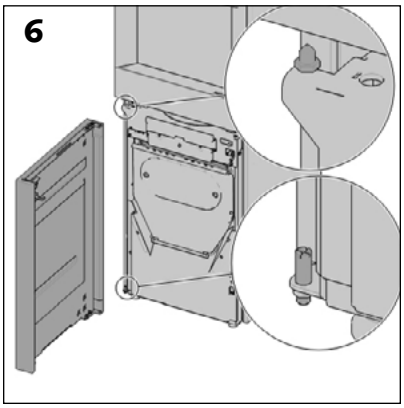

> Repeat steps 1 to 4 for the right trim [figure 5].

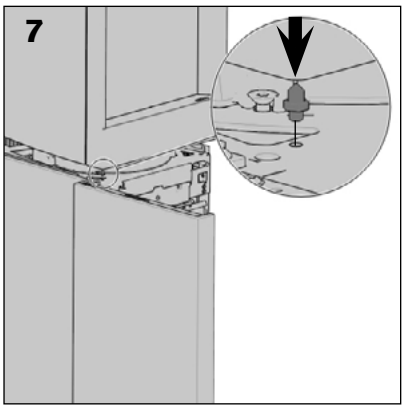

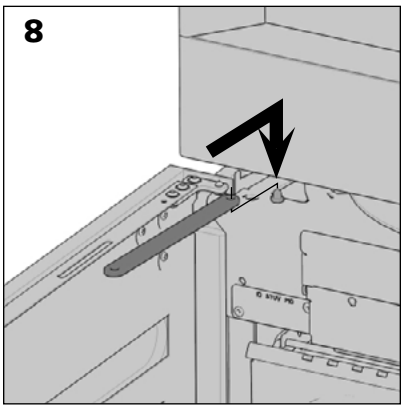

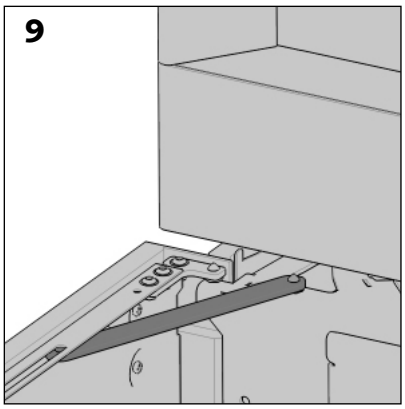

Final assembly - positioning the lower trims on the wooden version

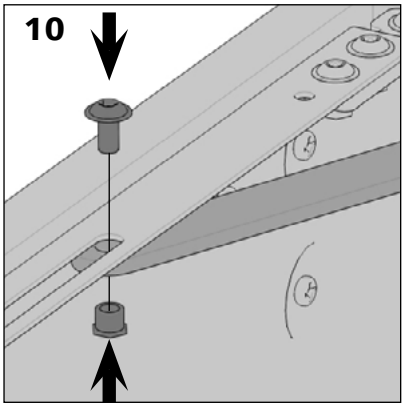

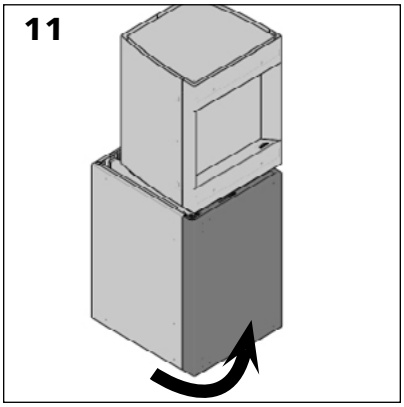

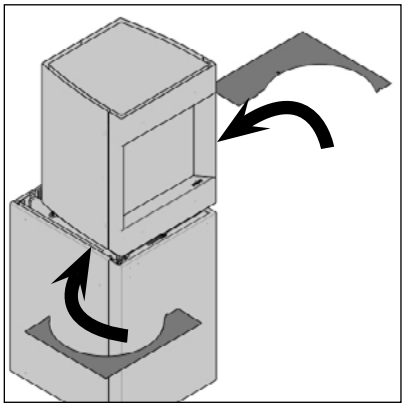

Final assembly – setting the shelves

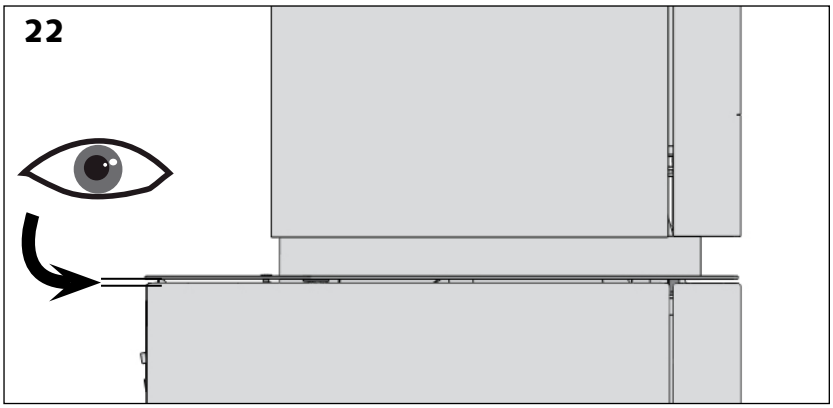

Once the shelves have been fitted on the base of the appliance, check the alignment with the bottom facings [diagram 22].

If adjustment is necessary:

> Remove the shelves and locate the adjustment screw [diagram 23 &24].

> Loosen the lock nut, and raise or lower the adjustment screw [diagram 24, details 1 and 2].

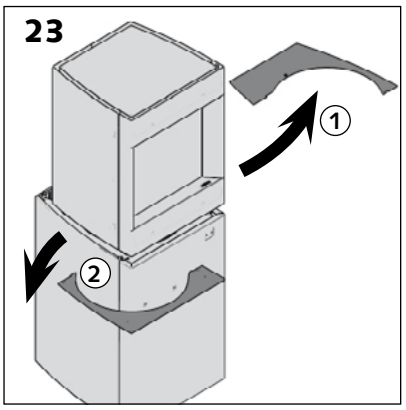

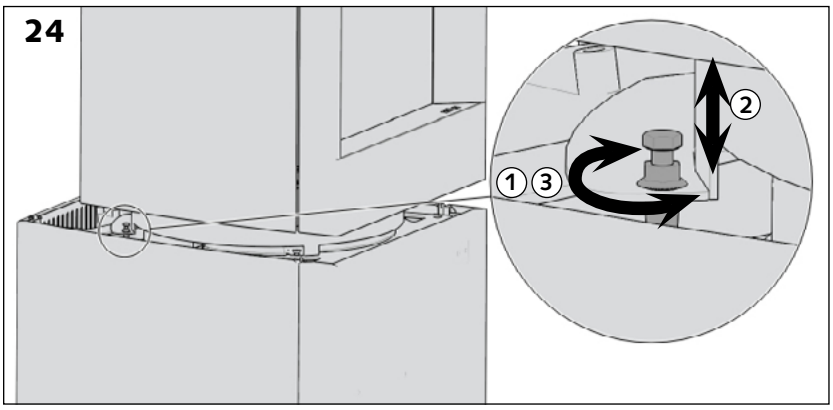

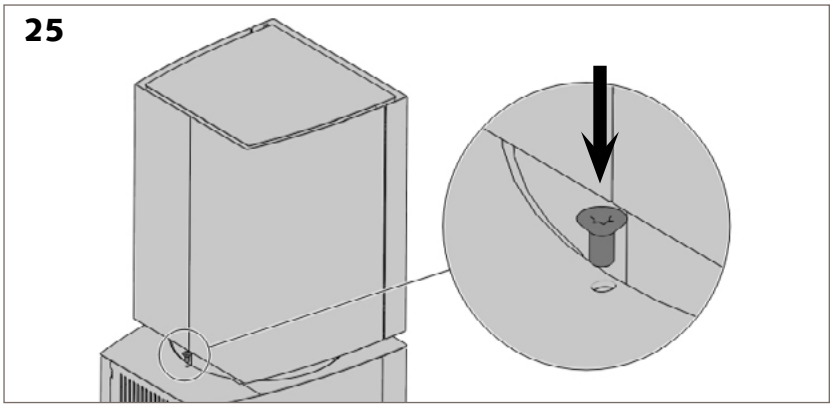

> Tighten the nut to lock the setting of the shelf [diagram 24 detail 3].

Once the facings have been correctly adjusted, fix them using an M5X10 torx head screw.

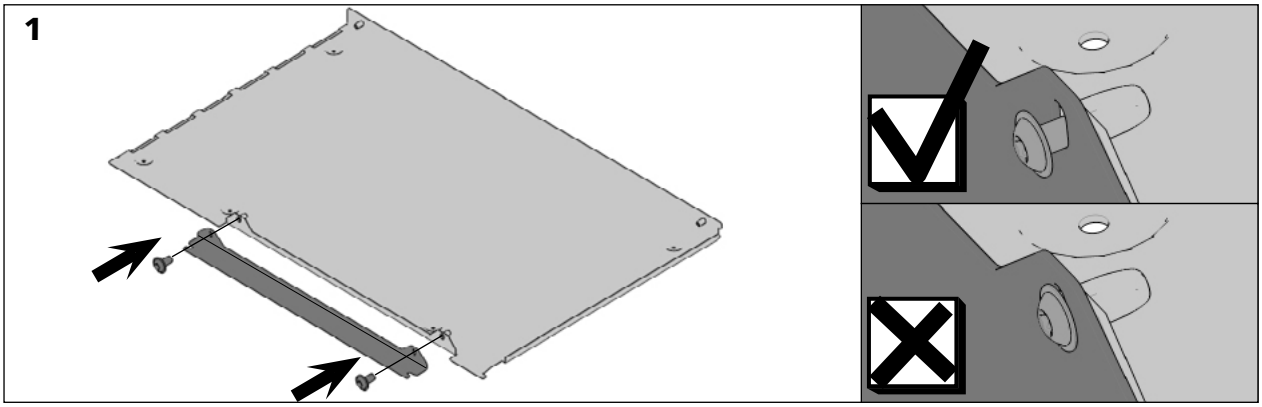

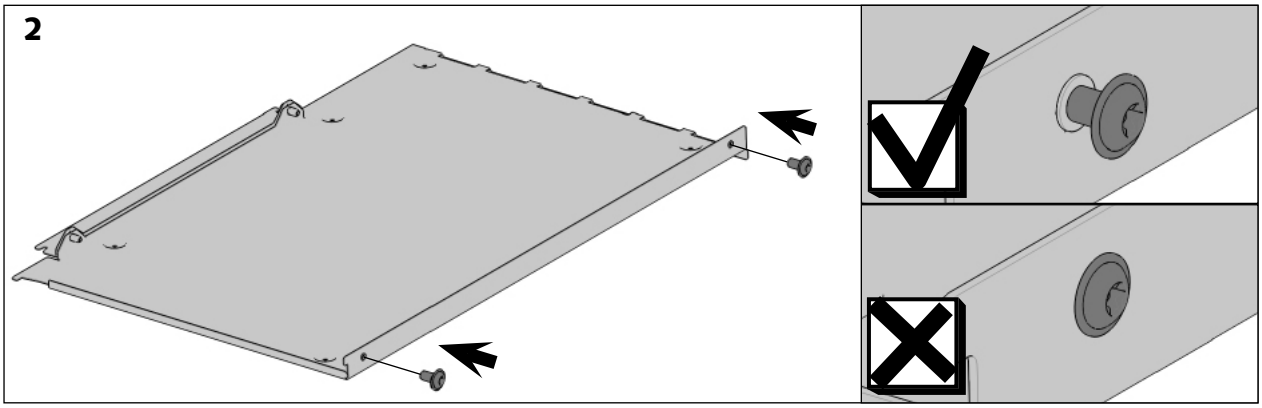

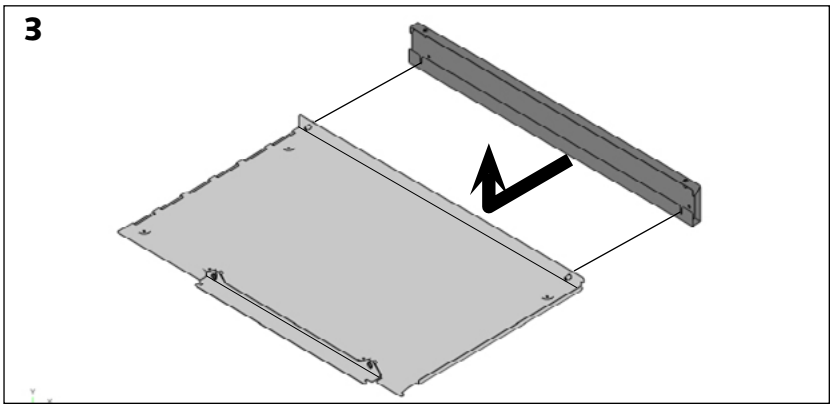

> Fit the adjustment angle bracket without tightening the screws [Figure 1].

> Pre-fit screws on the other side of the metal panel without fully tightening them [Figure 2].

> Fit the rear vertical profile [Figure 3] and tighten the serews through the slots provided for this purpose [Figures 4 & 5].

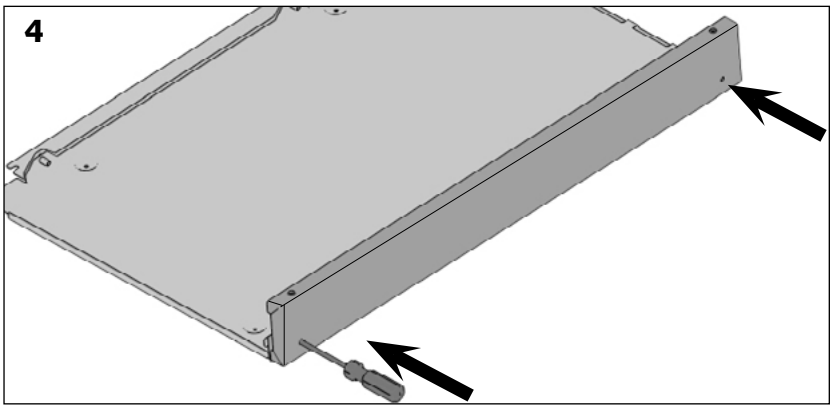

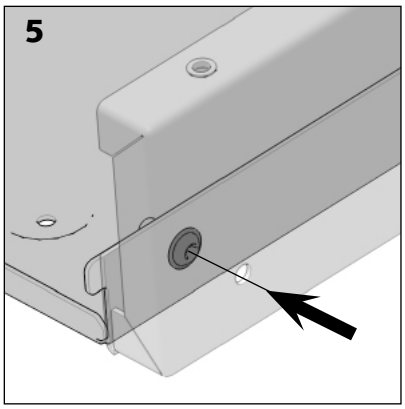

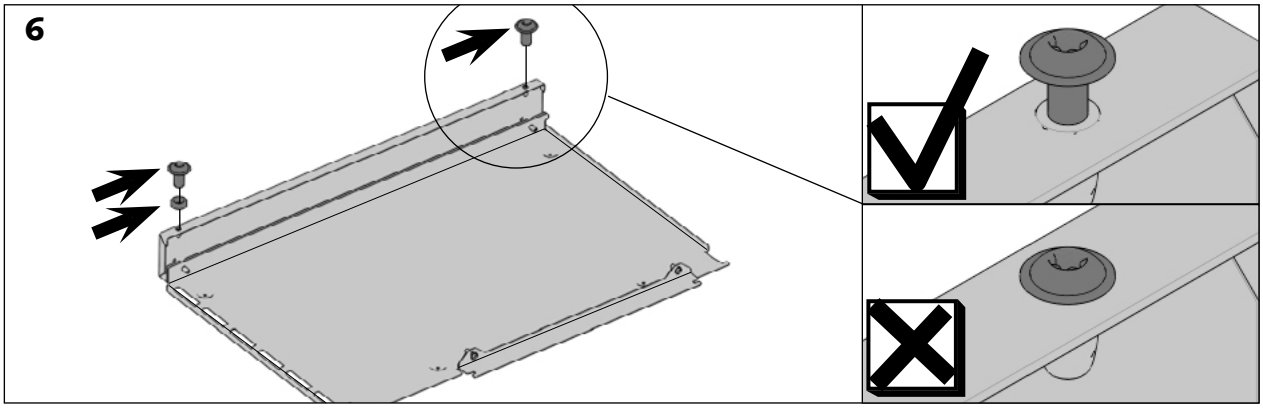

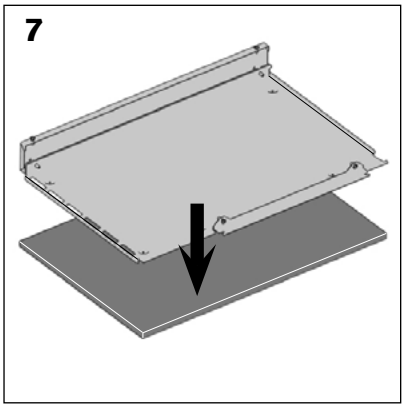

> Fit the screws on the rear vertical profile. Fit one screw then a spacer on the bottom and only the screw in the top part [Figure 6].

> Fit the metal panel on the finishing panel [Figure 7]. The grooved fold must butt onto the edge of the panel and the side of the metal panel must be aligned with the edge of the panel [Figure 8].

> Fix the metal panel and the panel using the wood screws [Figures 9 & 10].

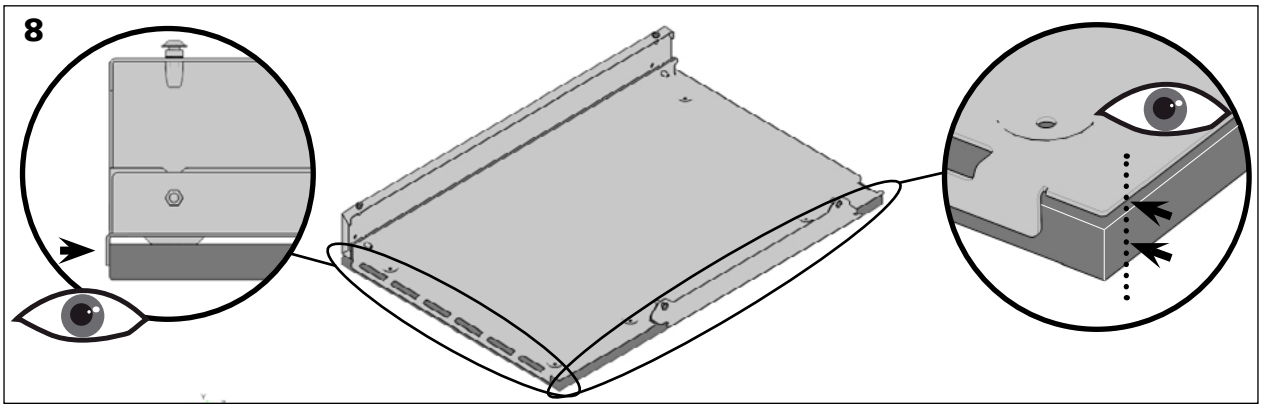

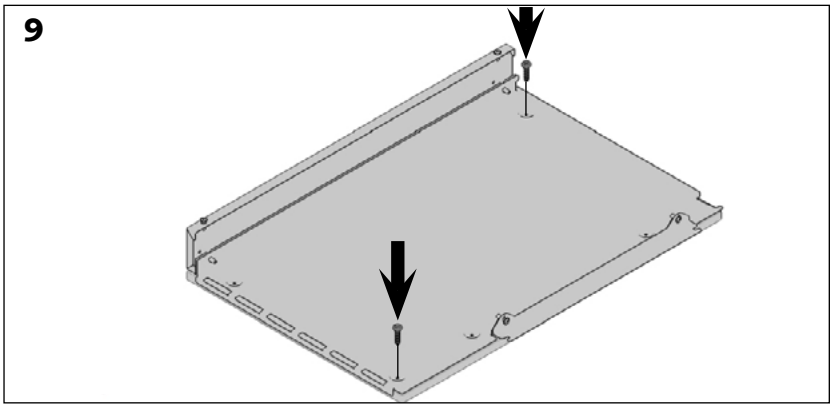

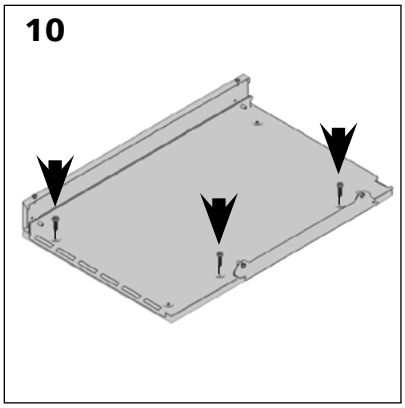

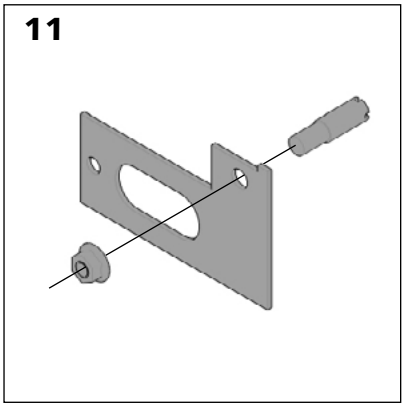

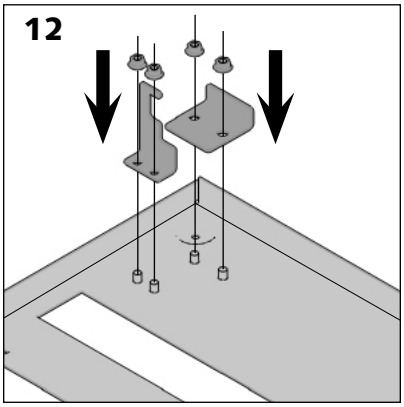

> Fit the wheel flange on the template [Figure 11].

> Fix the lugs for the door lock [Figure 12].

> Fit the templates onto the metal panel which is fixed onto the door panel [Figures 13 & 17].

> Align the edge of the template with the fold in the metal panel [Figure 14].

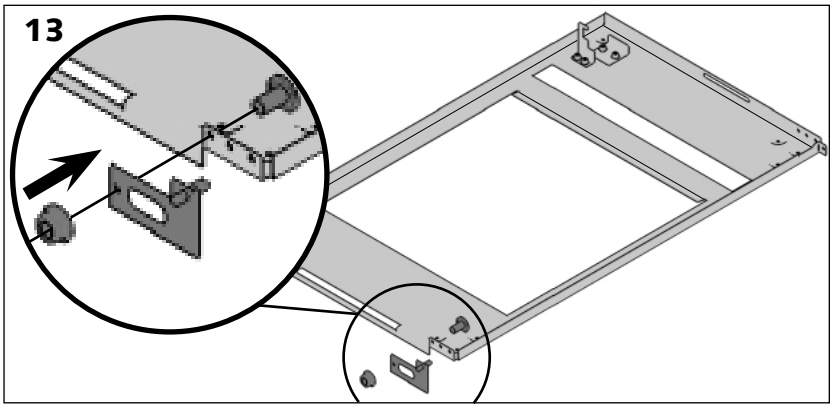

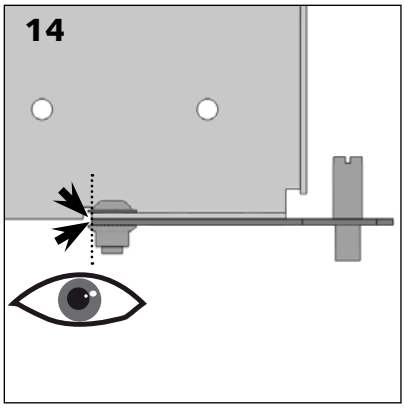

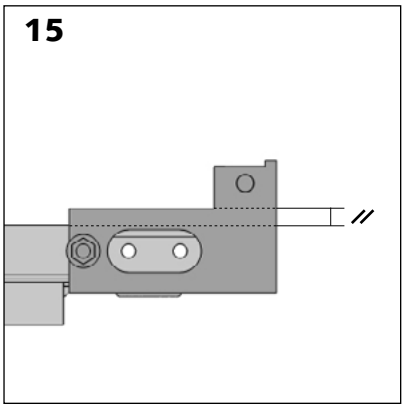

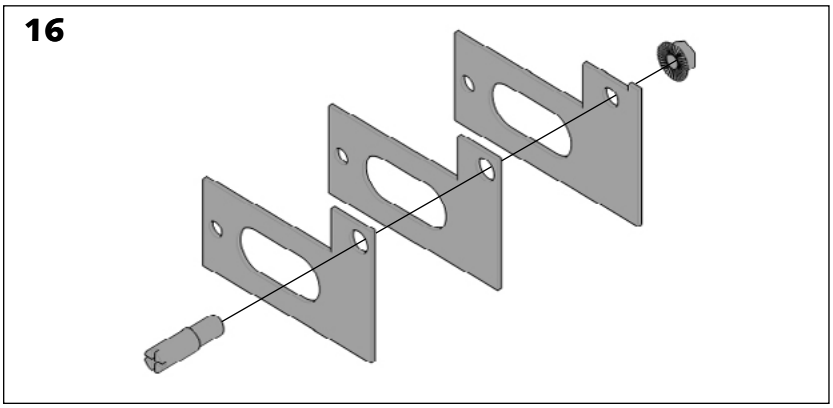

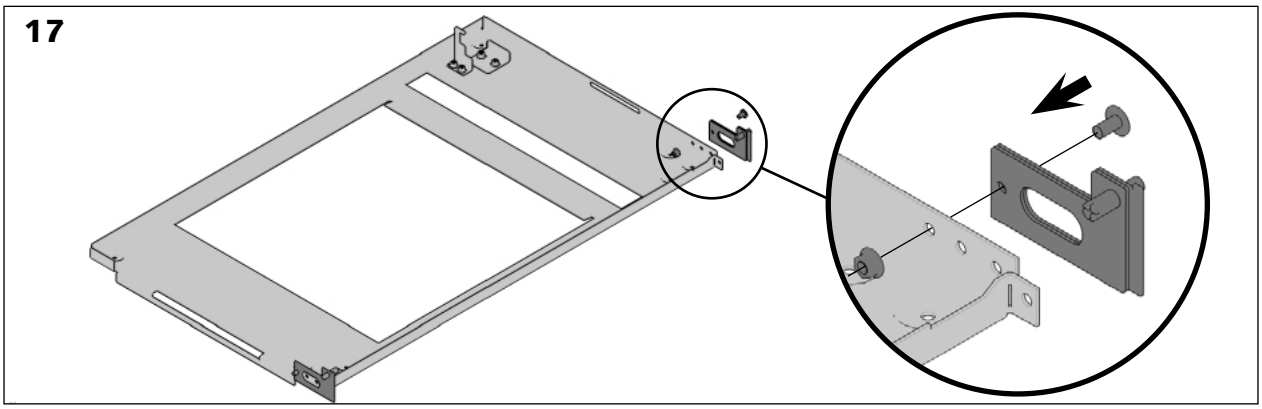

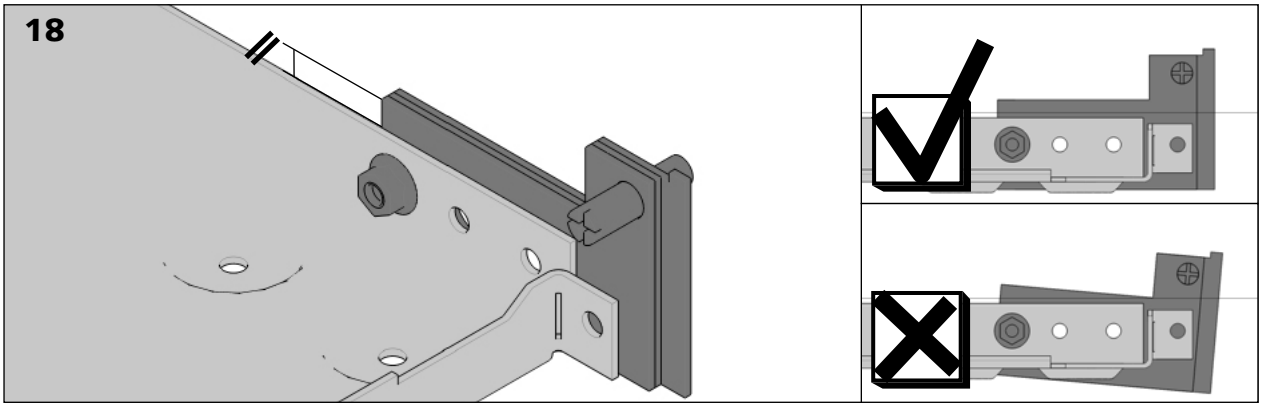

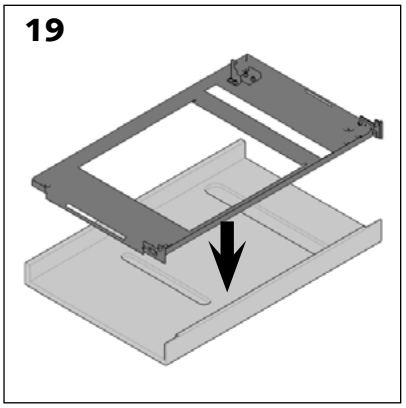

> Make sure that the templates are parallel with the fold in the metal panel [Figures 15 & 18].

> Fit the metal panel onto the door panel [Figure 19].

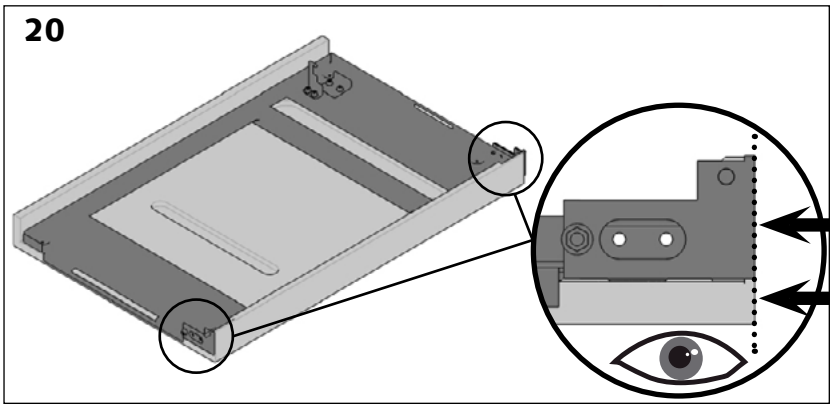

> Align the edge of the template with the fold in the metal panel [Figure 20].

> Fix the metal panel and the panel using the wood screws [Figure 21].

> Unscrew the fitting template [diagram 22].

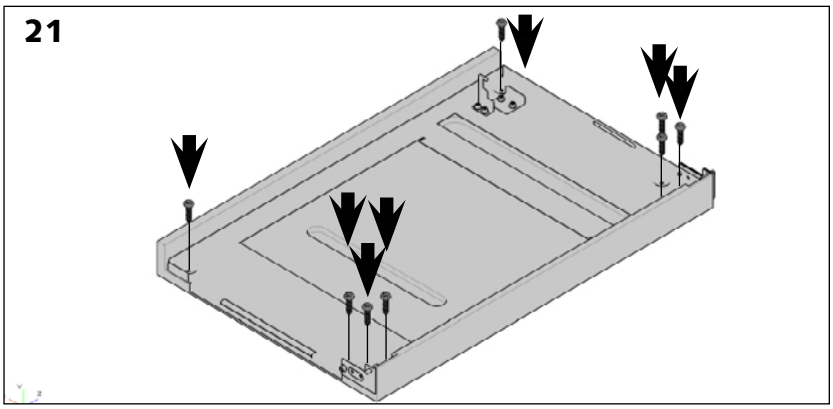

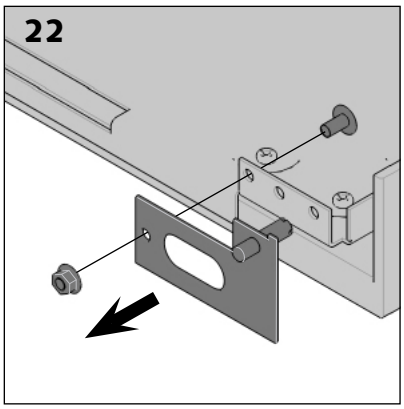

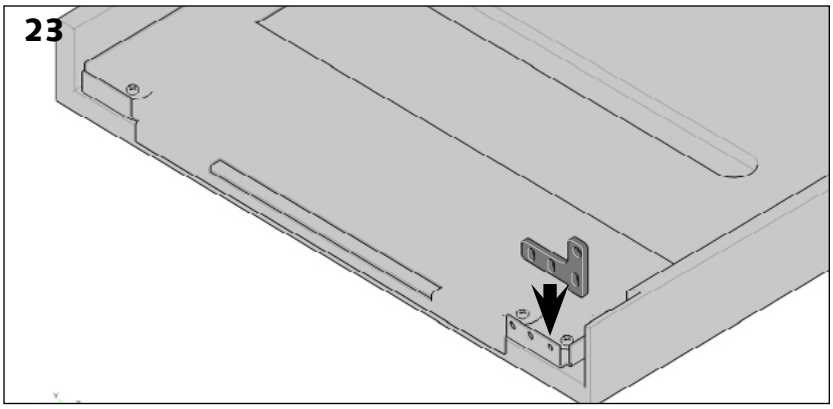

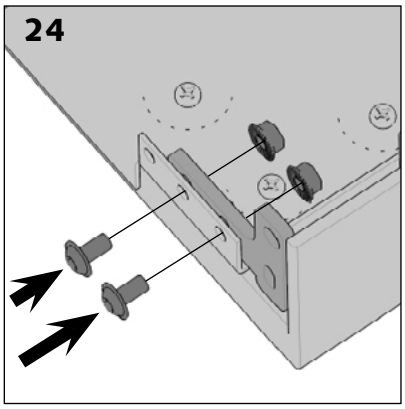

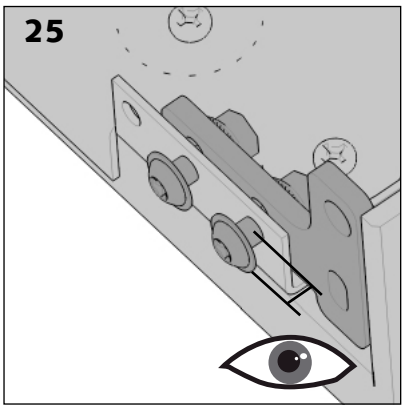

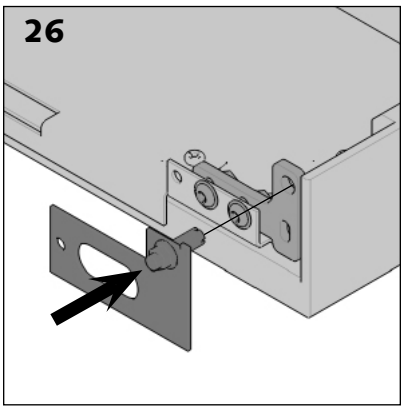

> Fit the part that will be used as a support to the door hinge [Figure 23]. Fit the screws but do not tighten them in order to be able to adjust the position of the part [Figures 24 & 25].

> Replace the template [Figure 26].

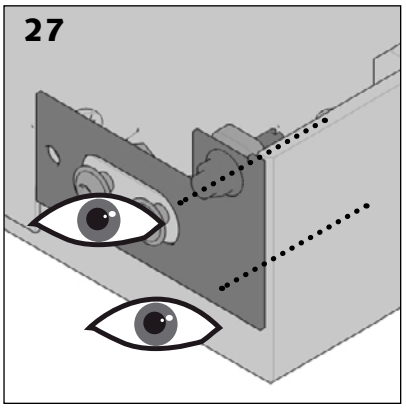

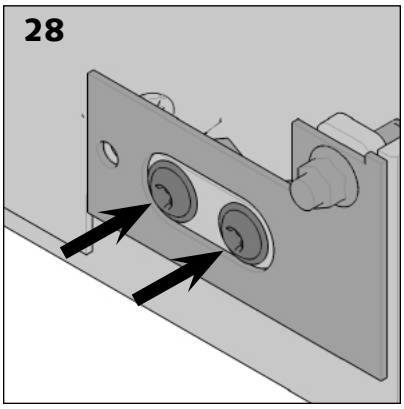

> Fit the template so that it is aligned with the top and side of the panel [Figure 27].

> Tighten the screws [Figure 28].

> Remove the template [Figure 29].

> Repeat the operation for the upper side.

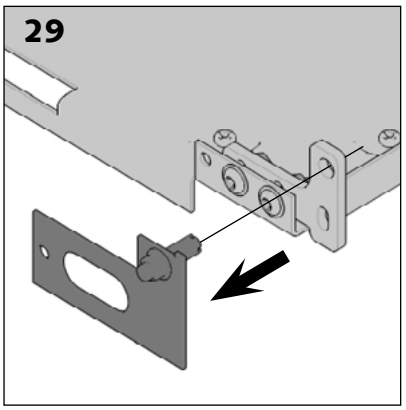

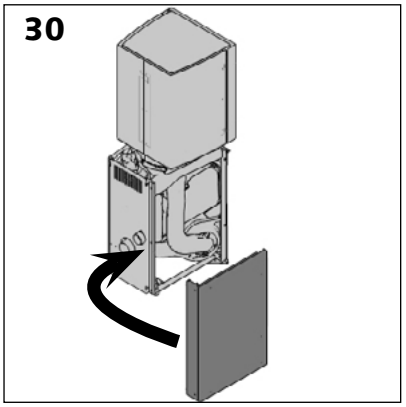

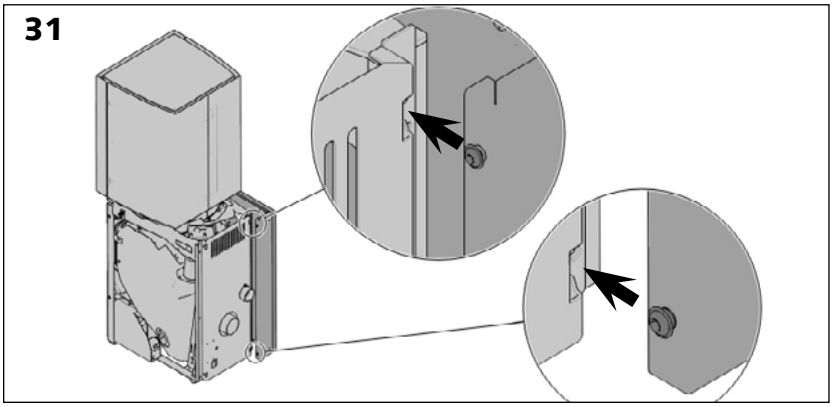

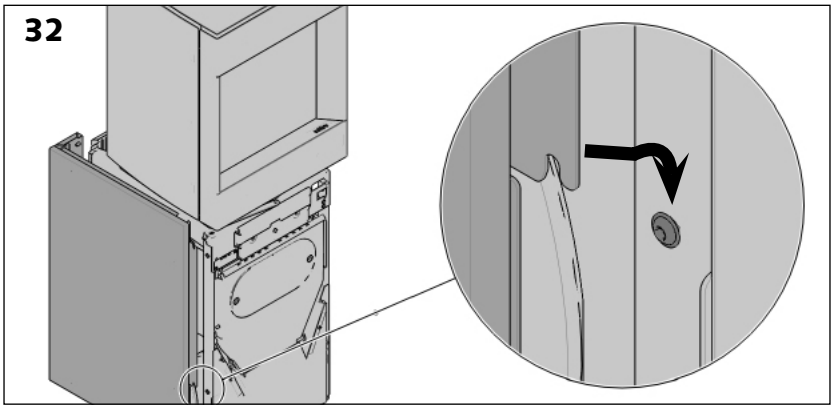

> Fit the side facings by sliding them from the back [Figure 30]. Slide the heads of the screws into the notches provided for this purpose [Figure 31].

> Press the bottom front part of the facing onto the screw [Figure 32]

> Screw the upper screw [Figure 33] and tighten the lower screw.

> Repeat the operation for the second side.

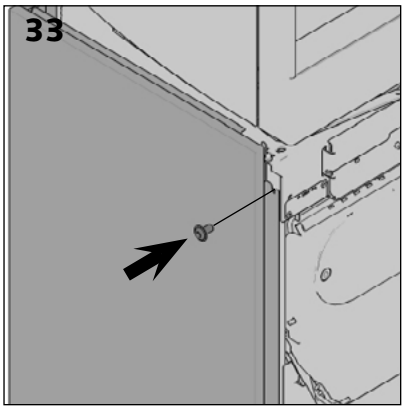

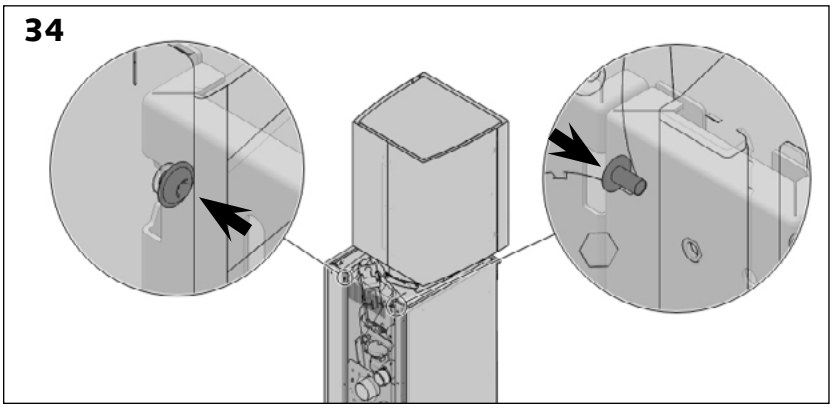

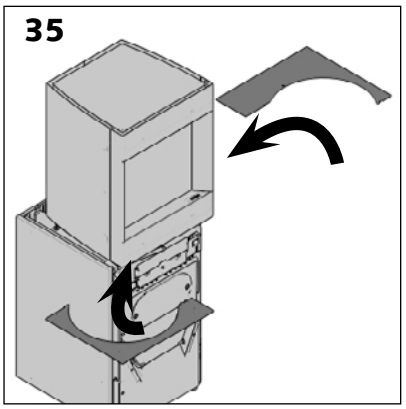

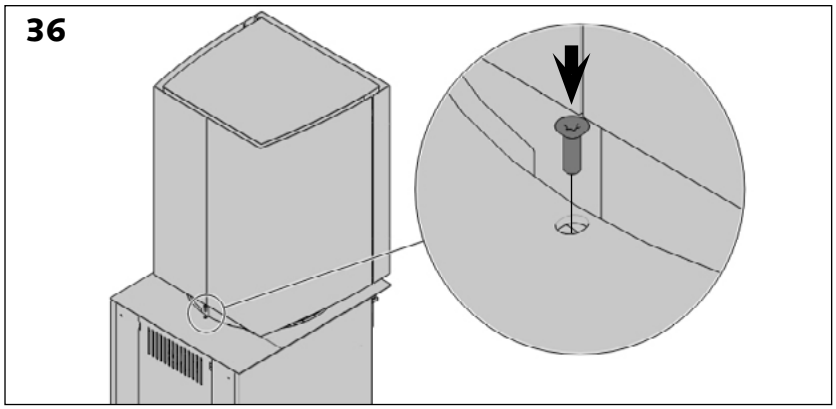

> Tighten both upper screws at the rear of the facings [Figure 34].

> Fit the shelves onto the appliance, starting with the front [Figures 35 & 36].

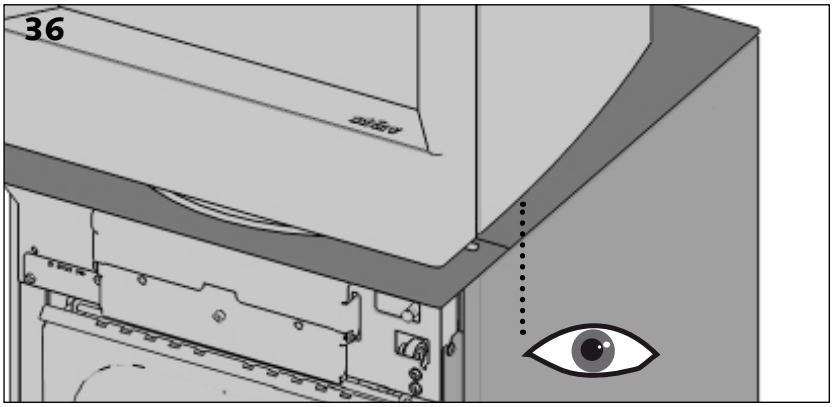

> Align the side panel with the edge of the shelf [Figure 36].

> Fix the position of the panel by tightening the screws on the adjustment angle iron [Figures 37 and 39]. To do this, remove the front cover metal panel [Figure 38].

> Refit the cover [Figure 40].

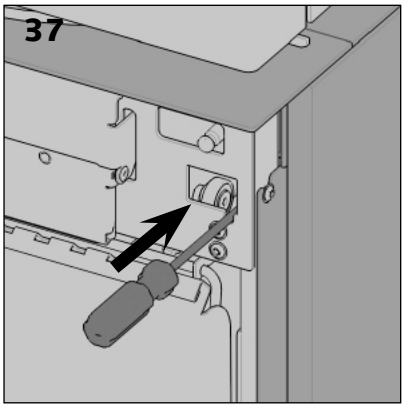

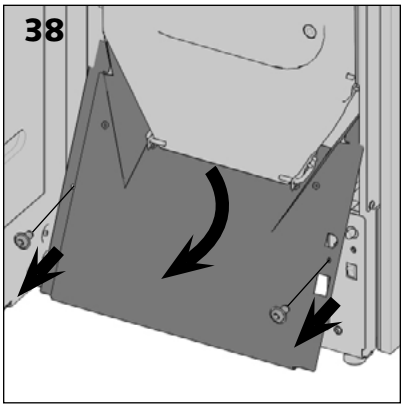

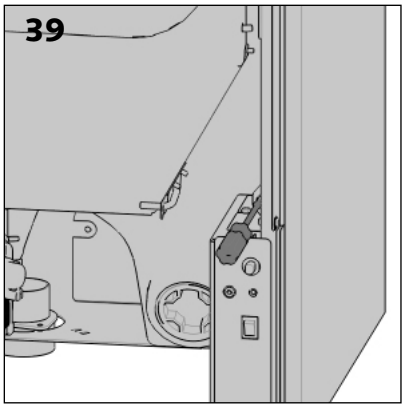

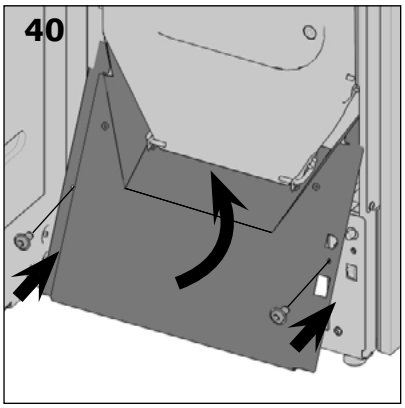

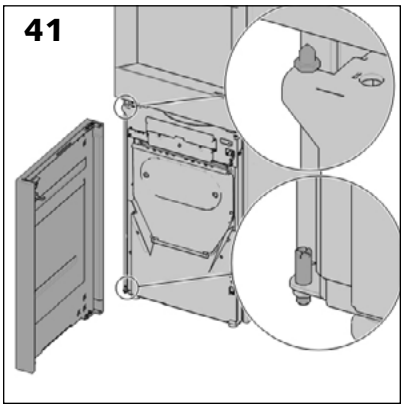

> Fit the door onto its hinges [Figure 41].

> Fit the shaft for the door closing strut onto the appliance's framework [Figure 42].

> Fit the strut onto the shaft [Figure 43].

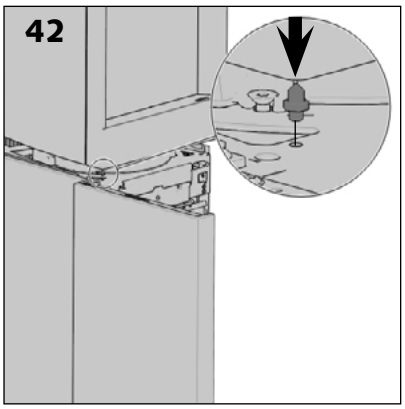

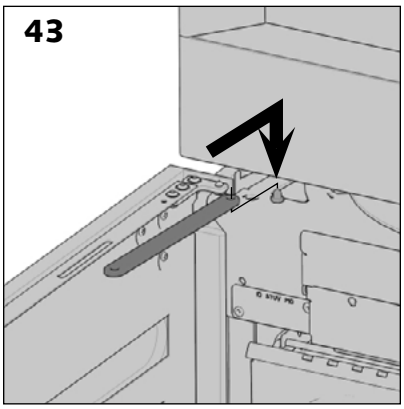

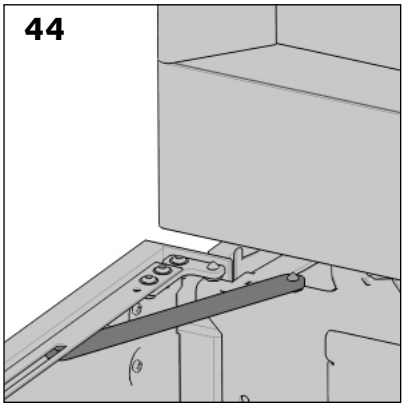

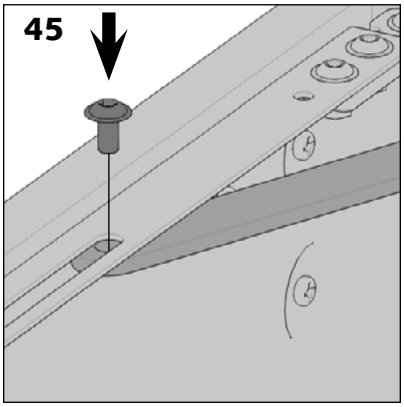

> Secure the strut to the door using a screw [Figures 44 & 45].

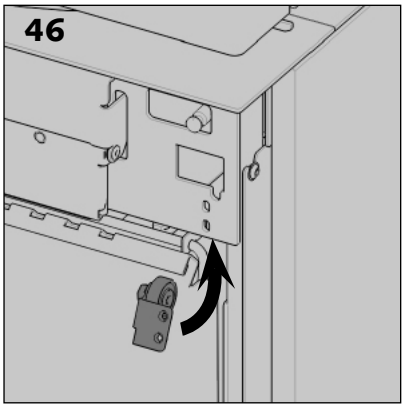

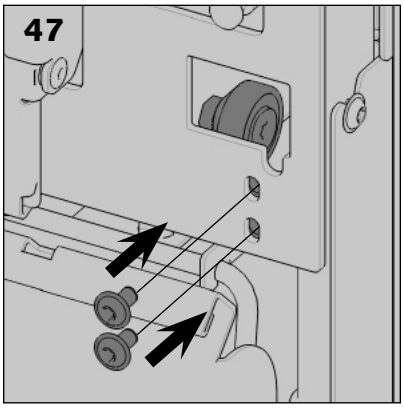

> Fit the bearing support from the bottom and fix it using two screws [Figures 46 & 47].

> In the default position of the support bearing, the bottom part of the fastening metal panel is flush with the bottom of the frame metal panel [Figure 48].

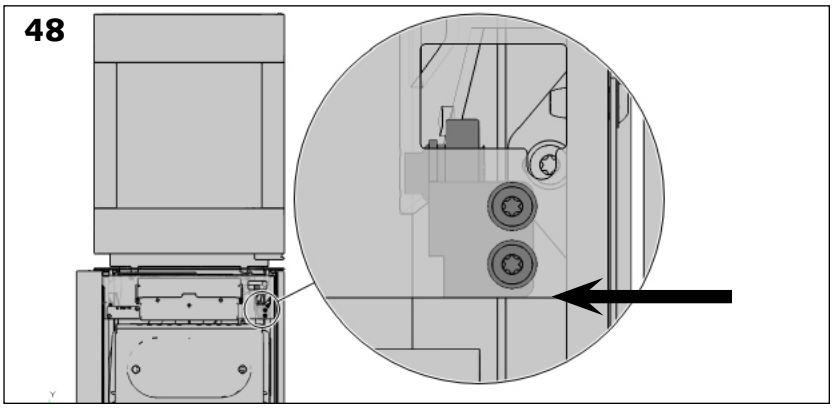

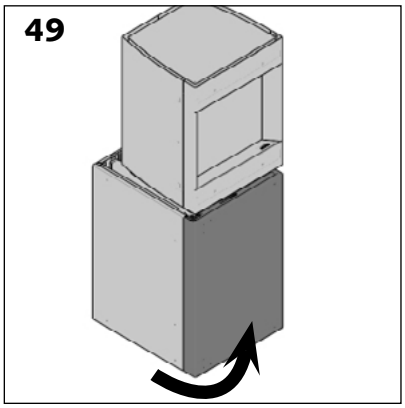

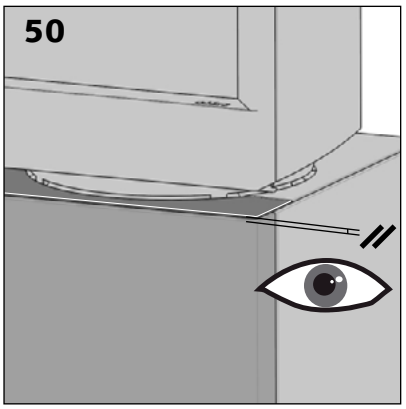

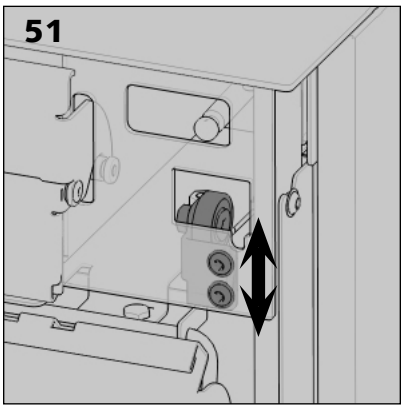

> If the hollow gasket is not equal between the shelf and the top of the door, it is possible to play with the height position of the support bearing [Figures 50 & 51].

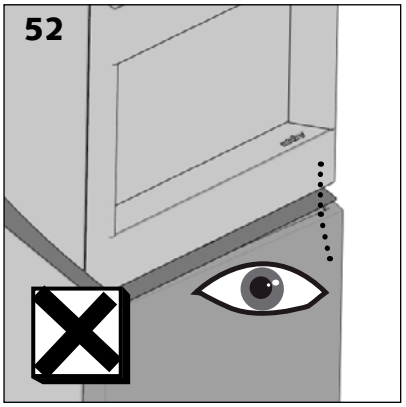

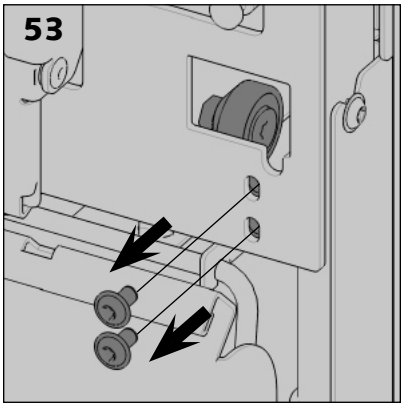

> If the shelf and the door are not alligned with the front [Figure 52], it is possible to play on the position, depth-wise, of the support bearing.

> Remove the bearing [Figures 53 & 54].

> Loosen the bearing and modify its position before tightening the bearing [Figures 55 & 56].

> Replace the support bearing onto the appliance [Figures 57 & 58]/

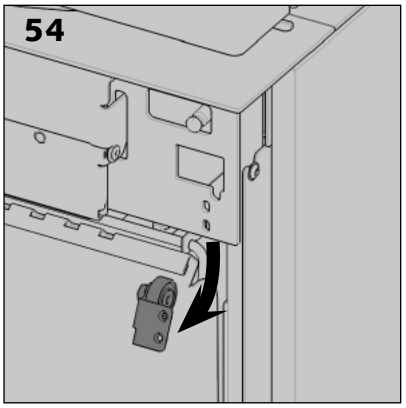

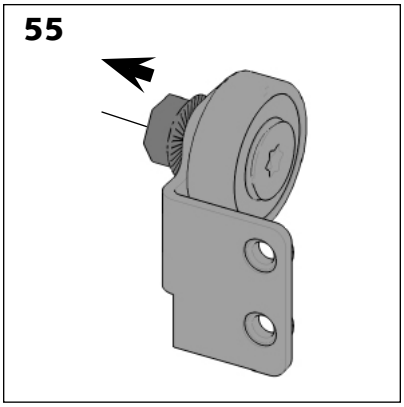

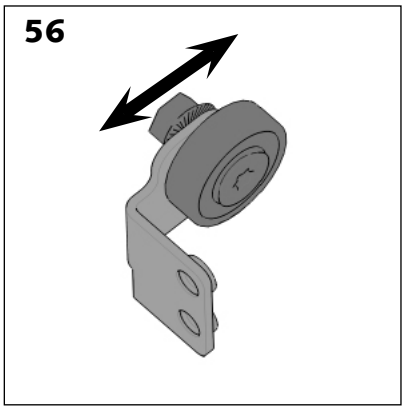

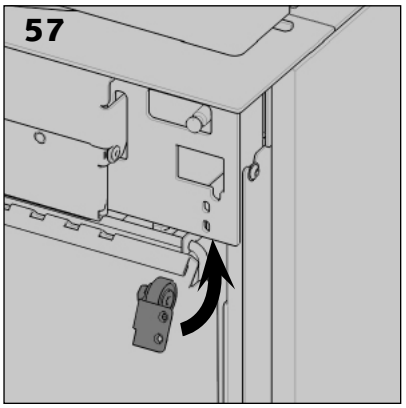

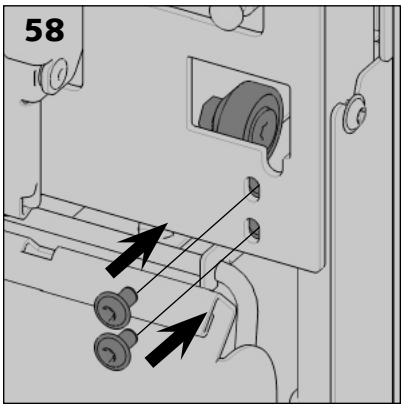

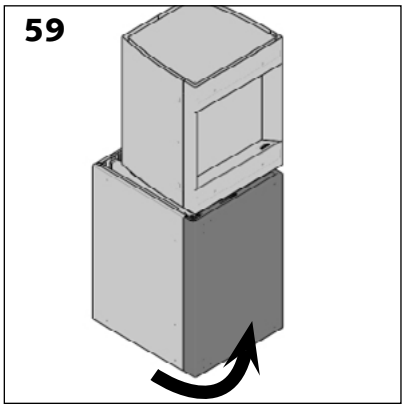

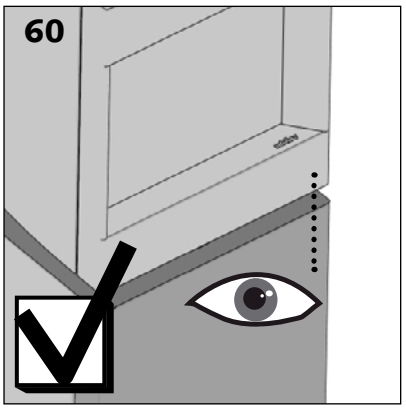

Powering up the Stûv P-10

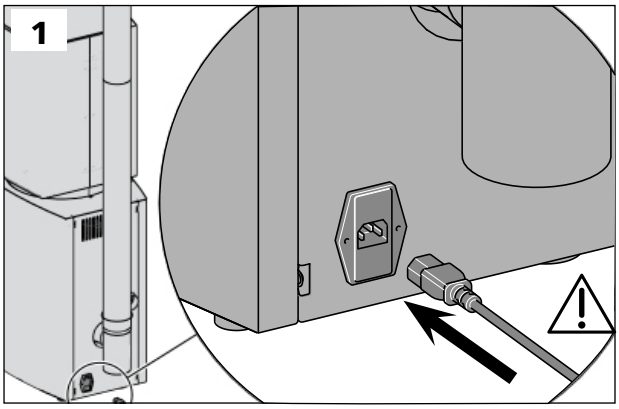

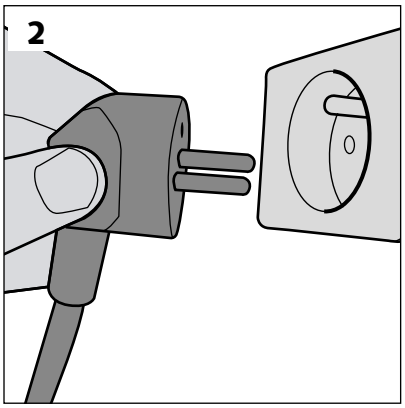

> Connect the Stûv P-10.

> Ensure the plug is fully pushed in. ⚠

Remote control connection and pairing *(optional)*

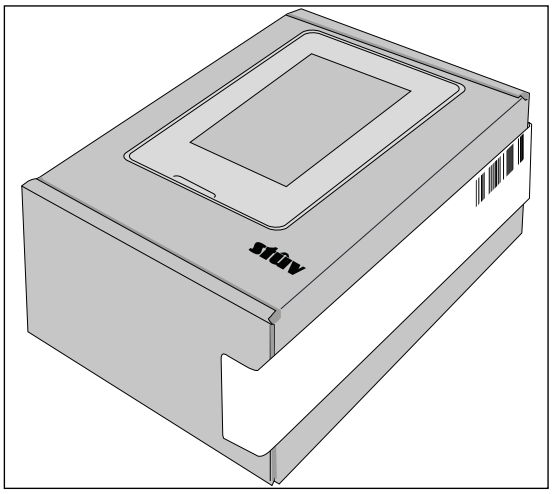

Please refer to the «**Quick start guide : remote control**» supplied in the remote control box. It will guide you through the various stages of pairing your device.

P10.3 button functions by press time

Buttons	Press time	Functions	Expected state
A	8 sec (long press)	Activating / deactivating the configuration mode	The Simplified Control Display screen flashes
En mode configuration (l'écran du SCD clignote)			
B	2 sec (short press)	Switching between Wi-Fi and wired (Ethernet) operation	The LED shows the status of the network (see LED status table below)
	8 sec (long press)	Switching the Wi-Fi module to an access point (detectable as a Wi-Fi module, can establish a connection)	LED flashes orange
C	2 sec (short press)	Opening a 1-minute remote control connection window	LED flashes purple
	8 sec (long press)	Resetting the connection to the remote control + opening a 1 minute connection window	

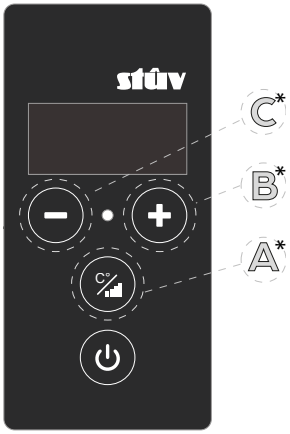

Simplified Control Display (SCD)

Indication of your connection status by the SCD LED

Colour	State	Meaning	Solutions
Green	Fixed	Connected to home Wi-Fi network	/
	Flashing	Home Wi-Fi network configured. No network access	Restart the home network configuration by checking its settings*.
Blue	Fixed	Connected to the home wired network (Ethernet)	/
	Flashing	Home wired network configured. No network access	Check that the Ethernet cable is properly connected to the router*.
Orange	Flashing	Wi-Fi of the device in access point mode	/
Purple	Flashing	Remote control connection window open (1minute)	/
Red	Fixed	General system error of the communication board	When the device is switched off, unplug it and plug it back in after 15 seconds
	Flashing	Connection error between the communication board and the control board of the device	Check that the communication cable is correctly connected between the 2 boards of the unit*.
switched off		Communication card not powered or software error	Check the power supply to the unit Check the power supply to the communication board Check the correct connection of the cable between the communication board and the control board

* Please refer to the networking procedure on the next page.

Why connect your P10.3 to Wi-Fi?

The connection of your device to the network is not limited to its remote control but also allows you to benefit from **Stûv's remote maintenance service**, **diagnostics on the status** of your device and **automatic software updates**.

There are two options for installing the communication module: the Wi-Fi connection and the wired connection via an Ethernet cable to the router (possibly via PLC modules allowing data to be transmitted via a wired electrical network).

This choice can be made by taking a PC and downloading an application such as **Netspot Free Edition** (Windows or Mac), **Vistumbler** (Windows) or **Wi-FiInfoView** (Windows), which will allow you to quickly assess the characteristics of the home Wi-Fi network.

⚠ In all cases, the router of the home network must respect the following constraints:

> The allocation of IP addresses on the network must be managed automatically by DHCP.
> Ports 1883 and 443 must be open to the outside world.

The tutorial for connecting the device to the home network is directly integrated into the application.

Once installed on your smartphone, it will guide you through the steps to connect your device. To install the application, please refer to the next point.

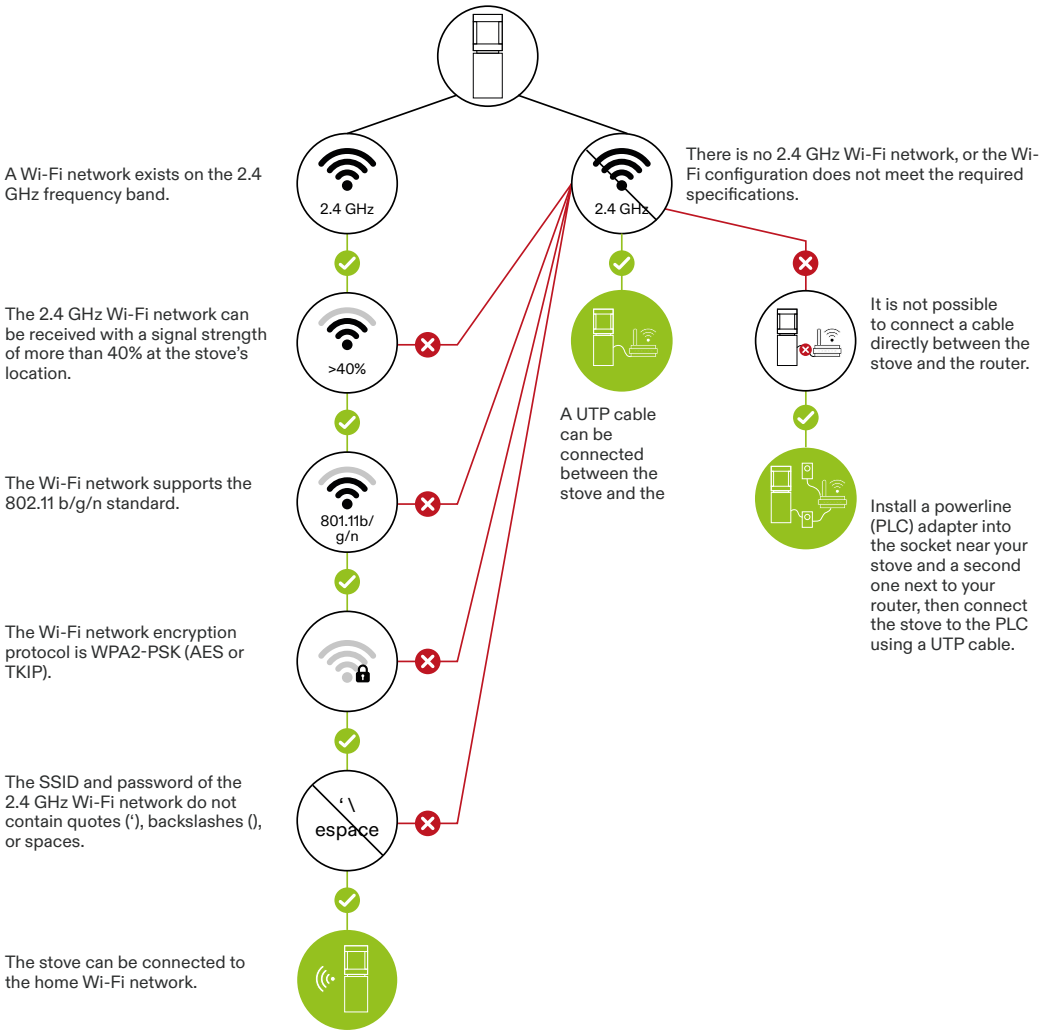

— IP address assignment on the network must be managed automatically via DHCP.
— Ports 1883 and 443 must be open to the outside.
— UTP cable must be Category 5e or higher.

Option 1: Wi-Fi connexion

The conditions to be met in order to connect the Stûv 10.3 to the home Wi-Fi network are :

1. **A home Wi-Fi network on the 2.4 GHz frequency band** (the 5 GHz frequency band is not supported);

2. **A network configuration preferably in the 20 MHz bandwidth** (the 40MHz bandwidth is now also supported although less stable)

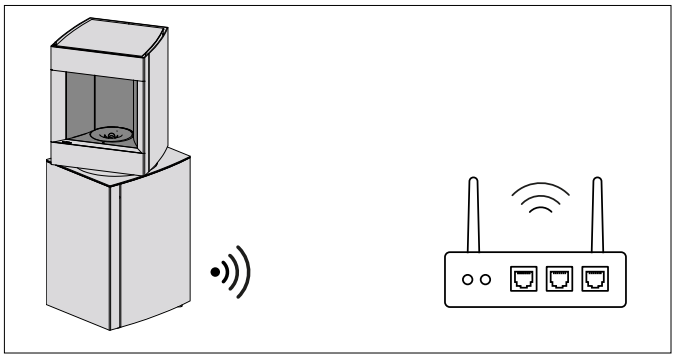

3. **An uncongested channel.** The communication card covers all 14 available Wi-Fi channels. A crowded environment with too many Wi-Fi networks can lead to connection problems (instability, disruption, etc.). ⚠**Configure your router** so that it uses a lightly congested channel.
4. **A home Wi-Fi network supporting 801.11b/g/n standards.**
5. **Different SSIDs** (= noms de réseau) **on the 2.4 GHz and 5 GHz bands.**
   ⚠ Some home Wi-Fi systems use a technology that only emits one SSID (Wi-Fi network name) for both the 2.4 GHz and 5 GHz networks. This technology regularly causes problems and does not always allow the P10.3 to be connected to the home network. In this case, we strongly advise you to configure an SSID for the network transmitting on the 2.4 GHz band and a different SSID for the one transmitting on the 5 GHz band;

   ⚠ The SSID can be visible or hidden;
6. **A Wi-Fi network encryption protocol is either WPA2-PSK (AES or TKIP) or a combination of WPA/WPA2.** WPA-Enterprise is not supported;
7. **A minimum of 40% Wi-Fi signal strength** where the device is located;

8. Neither the SSID (Wi-Fi network name) nor the password can contain the quote character (') or the backslash (\). Other special characters such as "#|&§!?,.;/:{}()*$[]" are supported.

⚠ If you are not familiar with the above parameters or if they are not (or cannot be made to be) compliant with the prerequisites, it is imperative to configure the installation in wired mode!

DETAIL OF THE ANTENNA INSTALLATION

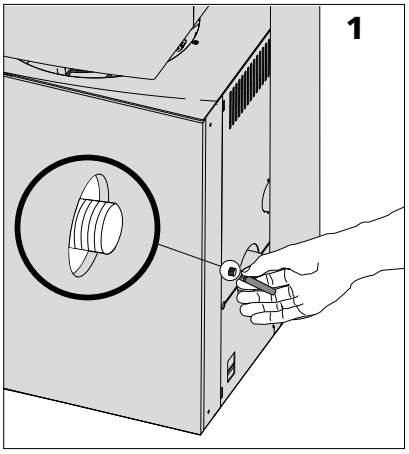

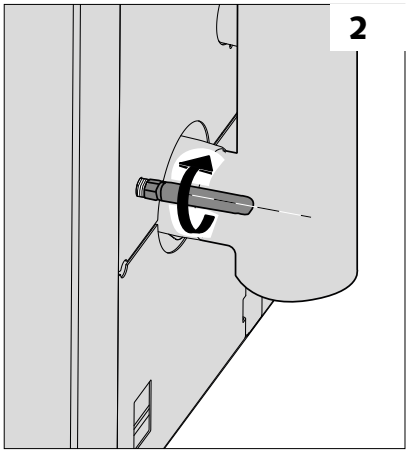

Setting up the device on the home WiFi network

The stove needs to be set up on the end user's WiFi network so that they can control it with an online device.

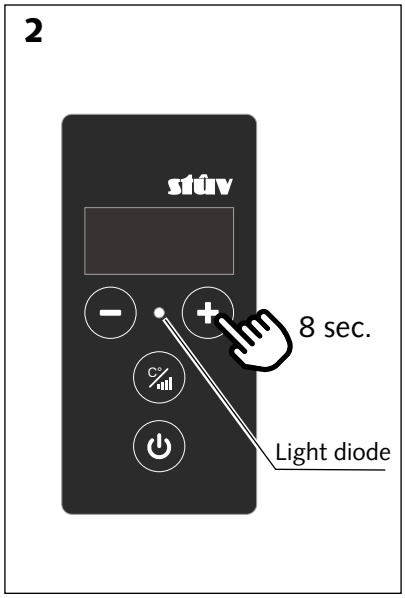

> Press and hold (min. 8 seconds) the button [diagram 1].

> Then press and hold (min. 8 seconds) the button [diagram 2].The light should **flash orange**. This means that the device is in "access point" mode and is ready to be connected to a WiFi network [figure 1].

> Connect to the WiFi network called **"Stuv_P10 S00XXXX"** [figure 3] on an online device (smartphone, tablet or PC). No password is required. *This network is not secured.*

> On the same online device, open a web page and enter the following address into the address bar: **http://192.168.100.1** [figure 3].

N.B.: Be careful not to confuse a search engine search bar with the address bar.

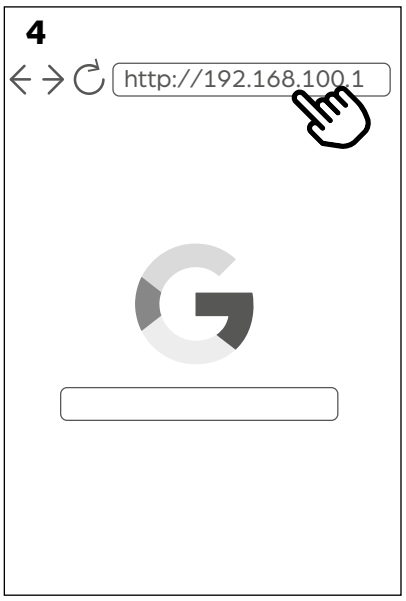

> When you are on the web page, scroll through the first dropdown menu and select the wireless network on which you want the device to be set up [figure 4].

> On the resulting page, pull down the first pane to select the wireless network on which the device should be installed [Figure 5.1].

> If the desired wifi network is hidden, it is possible to type the device name directly to perform a search [Figure 5.2].

> Enter the password for the wireless network you have chosen then click on "configure and restart" [figure 6.].

Warning: make sure you have the exact password for the end user's wireless network.

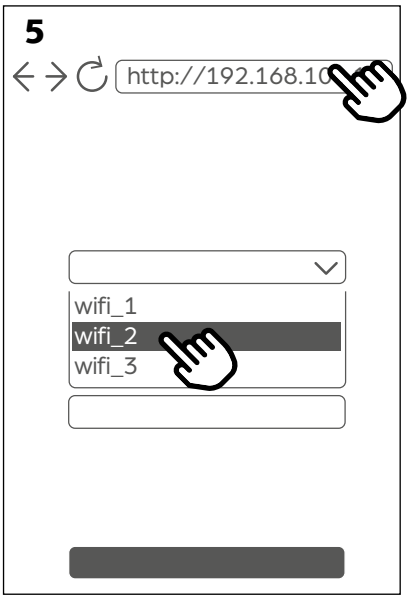

Note: Some special characters and punctuation marks in the Wi-Fi network name (SSID) can cause connection problems.

Note: the Stûv P-10 is only compatible with Wi-Fi networks using a frequency of 2.4 GHz. Adjust the modem router if necessary.

The stove will then be set up on the home network.

** Stûv cannot be held responsible for compatibility with the Wi-Fi network or the stability of the Wi-Fi network*

7

When the device has been set up successfully on the home network, an error page will appear on the Internet browser, which confirms that the stove is no longer an access point and has indeed been connected to the network [figure 6]. The light diode changes to solid green.

Please note: the connection may take several minutes.

> Make sure that the device can be used with an online device by installing the app and carrying out a connection test.

If the device has been successfully installed on the home network, an error page will be displayed in the Internet browser confirming that the home is no longer an access point and has been successfully connected to the network [diagram 7].

> **The LED should then turn solid green, indicating that the operation was successful.**

A flashing green light tells you that the device could not connect to Wi-Fi. The error is either in the password or in one of the communication settings (see Summary p.45).

** Stûv cannot be held responsible for the compatibility with the Wi-Fi network or the stability of the Wi-Fi network.*

Option 2 : wire connexion

The two possibilities for connecting the P10.3 to the wired home network (Ethernet) are :
1. The direct or indirect (via the home network) cable connection to the router;

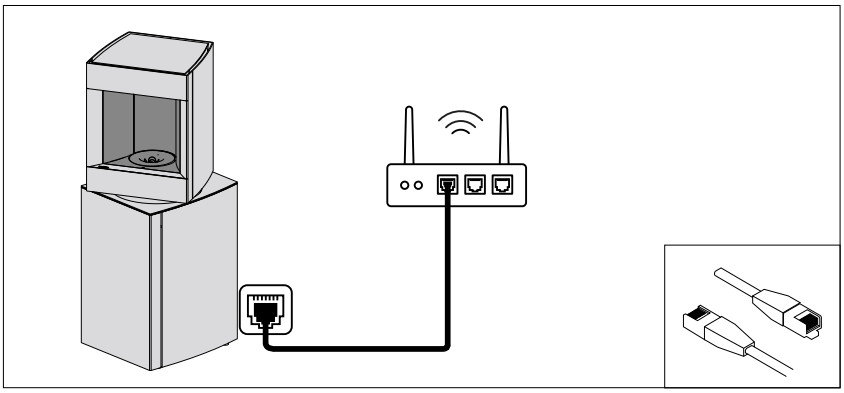

2. Connection to the router via a PLC (power line).

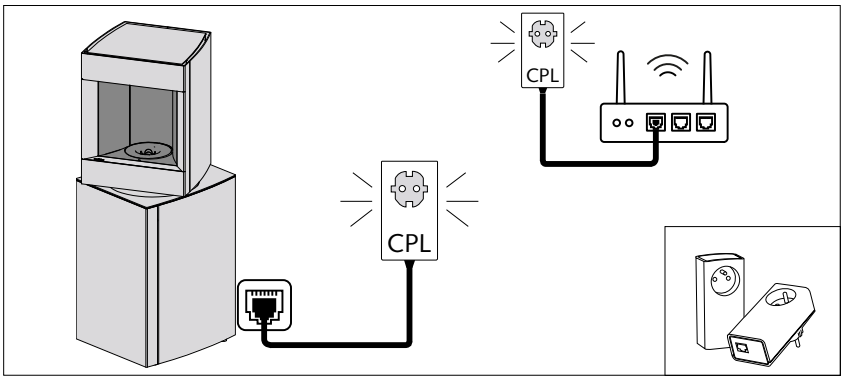

If the router is too far away from the stove, a system such as a PLC can be a simple solution for setting up the cable. (The purchase price of such an option varies between 50 and 75 euros).

ETHERNET CABLE CONNECTION DETAIL

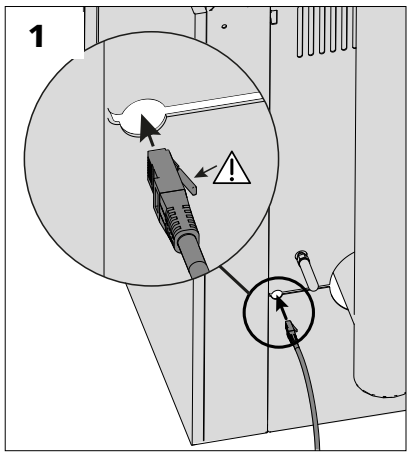

Once the ethernet cable is connected to your router or PLC, connect the other end to the back of the device [Figure 1].

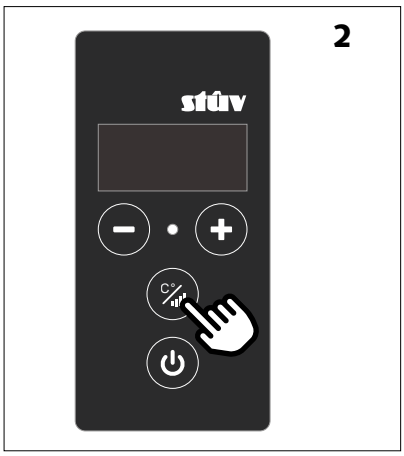

Then press and hold (+ 8 seconds) the button to enter the configuration mode. In setup mode, the SCD screen flashes.

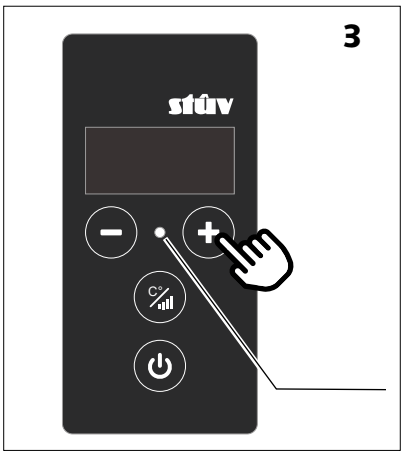

Finally, press the button briefly + to switch to wired mode and complete the operation. ⚠ **The LED should then turn FIXED blue, indicating that the operation is successful.**

⚠ A BLINKING blue indicates a cable connection problem and/or a network access right problem. In this case, please check these 2 points and repeat the above operation.

ETHERNET CABLE DISCONNECTION DETAIL

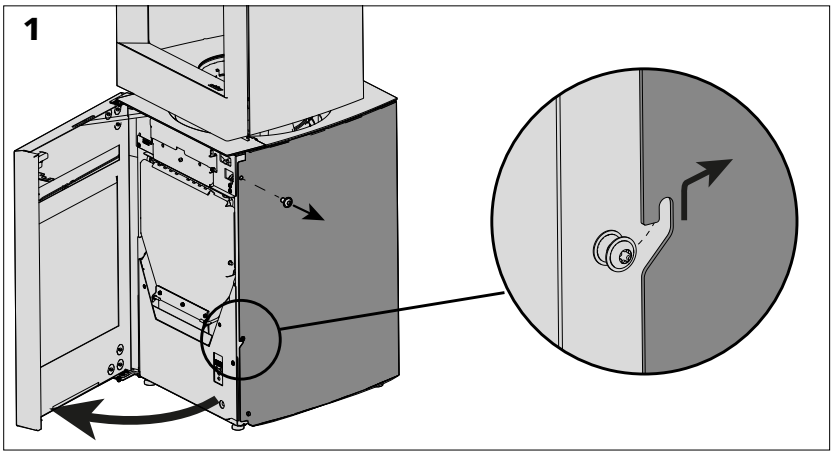

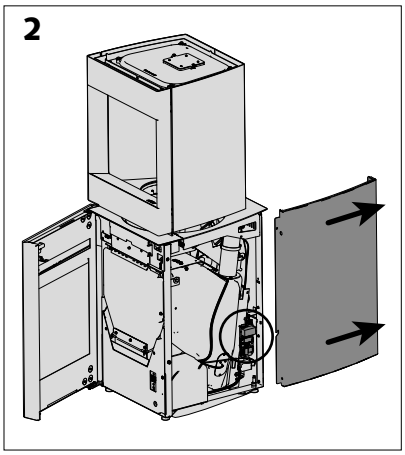

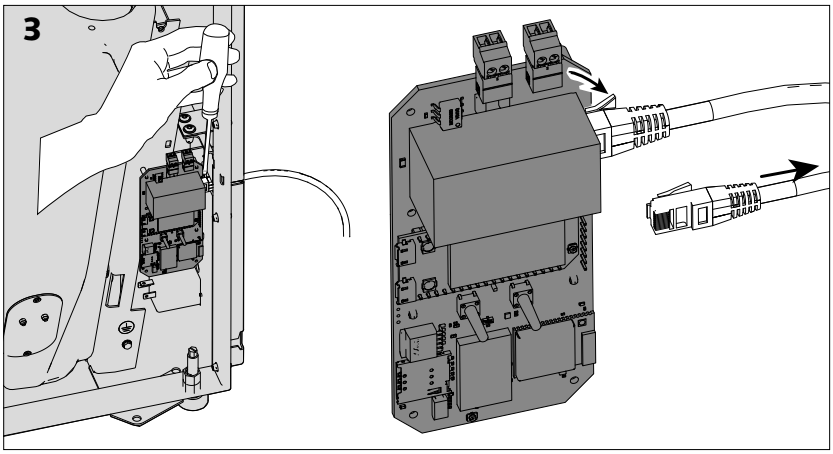

> If you wish to disconnect the Ethernet cable, remove the right side panel [figure 2] to gain access to the unit's network card.

> Disconnect it as shown [figure 3].

Controlling the Stûv P-10 with a smartphone

The Stûv application complements the remote control supplied with the device.

> Download the free app by searching for “Stûv P-10 remote” in the Playstore or the Appstore.

Download on the App Store

GET IT ON Google Play

> When the application is launched, a message indicates that no stove is connected. Press "Connect my device" to start the connection procedure.

> Follow the rest of the connection steps on the application. The application is ready for use as soon as the room temperature is displayed on the screen.

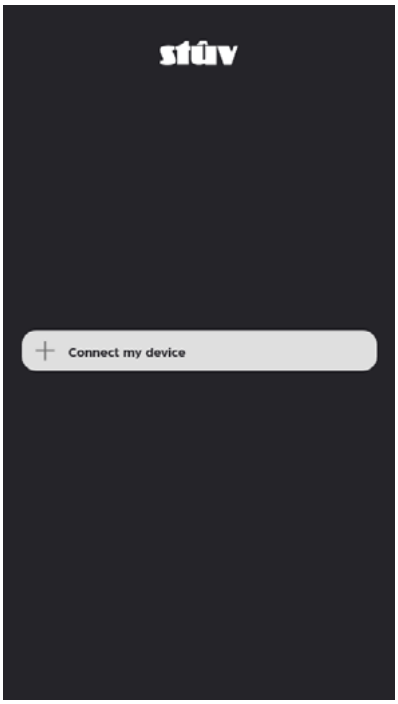

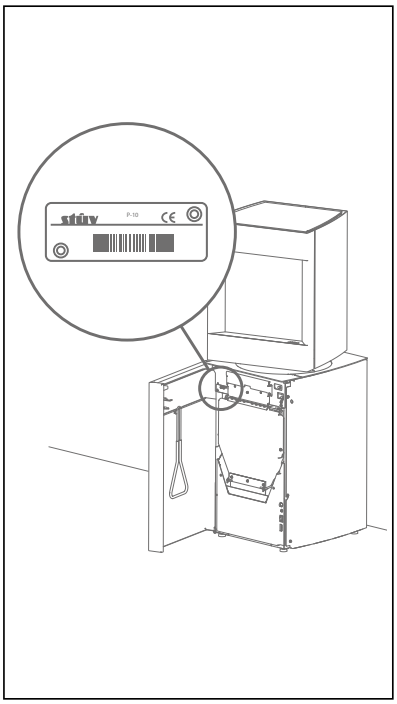

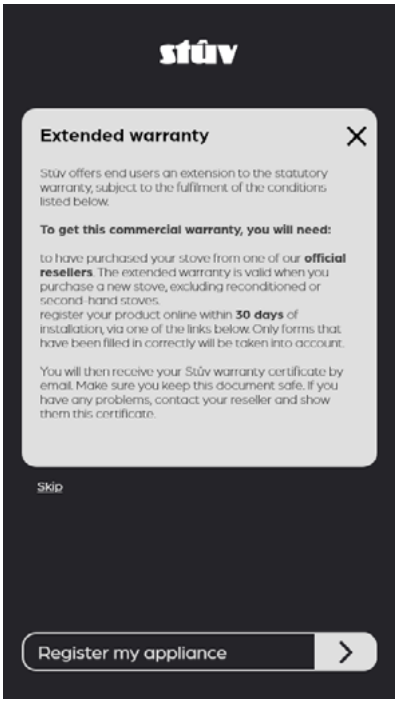

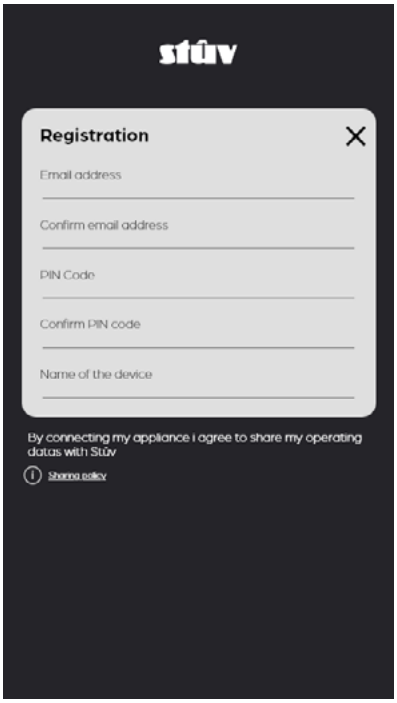

Flux calibration (mandatory after each transport)

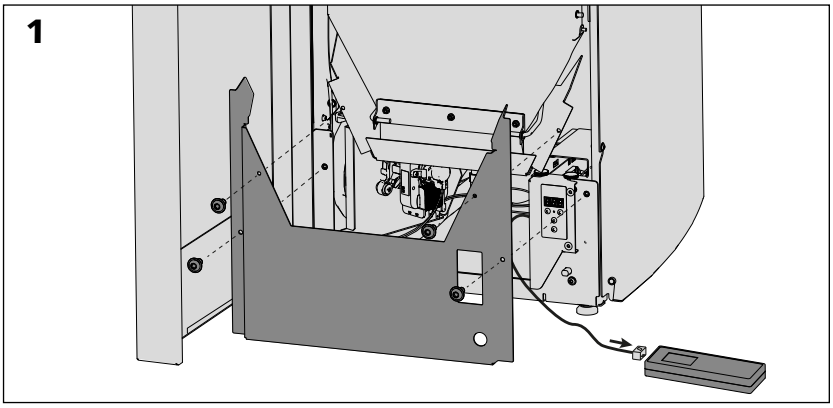

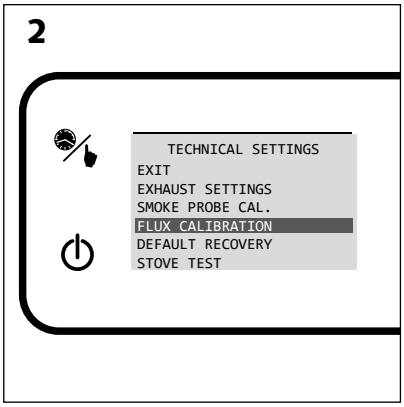

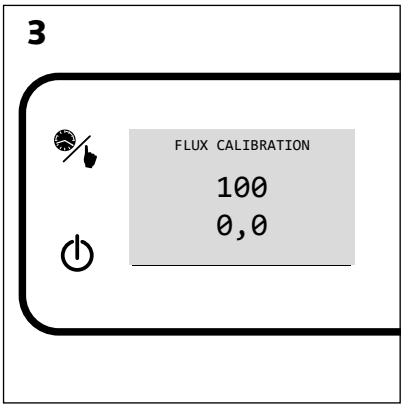

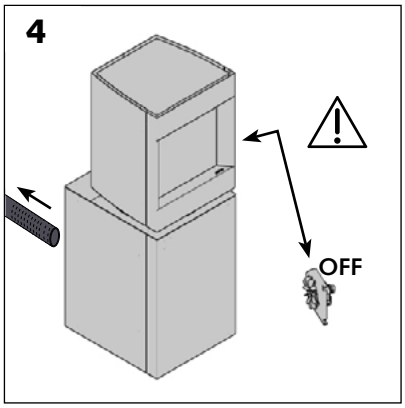

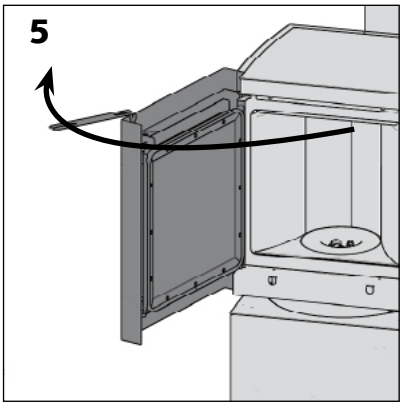

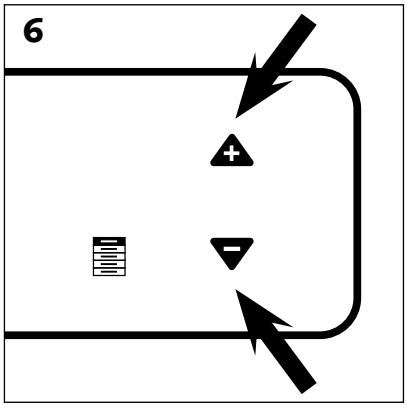

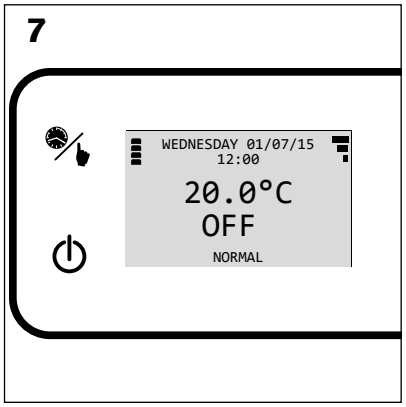

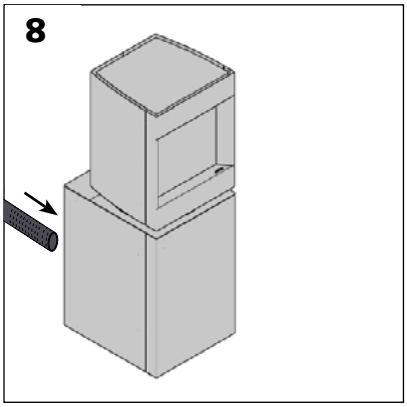

⚠ **The diagnostics and wired settings display specific to Stûv is needed for the next step.**

> Plug in the display to the appropriate socket behind the lower hood [figure 1].

> Go into the "Calibration flux" menu using the button [figure 1].

If the values shown are: 100 and 0.0, the flow sensor is calibrated correctly [figure 2]. If not, you will need to recalibrate; to do this:

Warning!
Calibration must be carried out when the device is switched off with the fan shut down, with any external air inlet disconnected. The door also needs to be open. [figures 3 & 4]!

> On the calibration flux screen, press and at the same time [figure 5].

> The device will then reconfigure the flow sensor.
Wait for the remote control to display the home screen. Once it does, the process is complete [figure 6].

> Connect the external air inlet [figure 7].

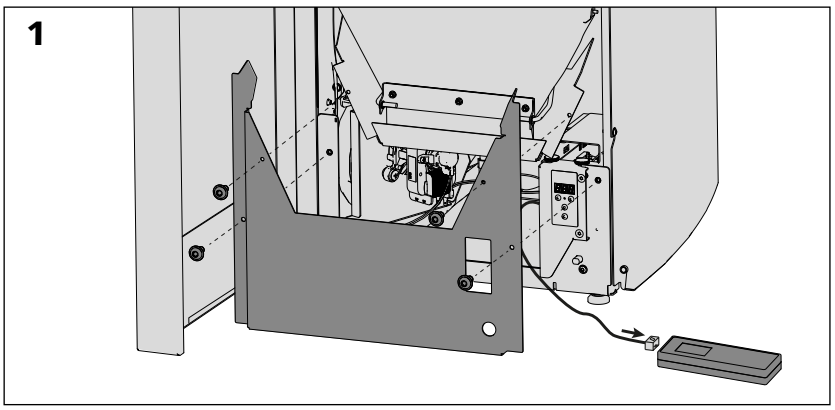

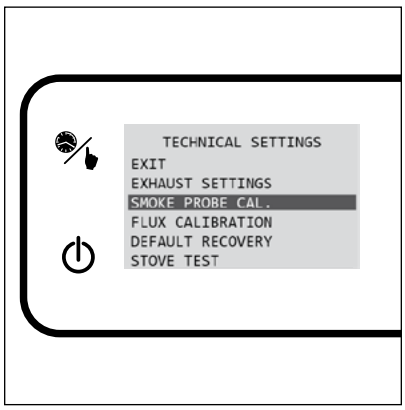

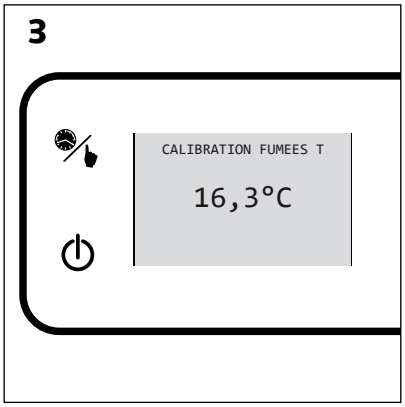

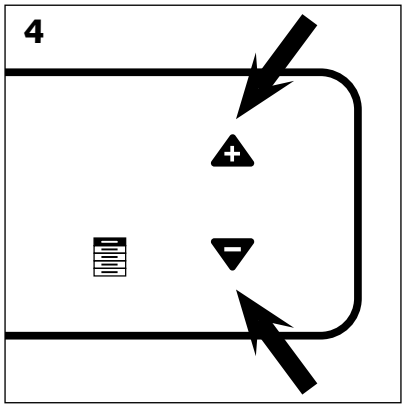

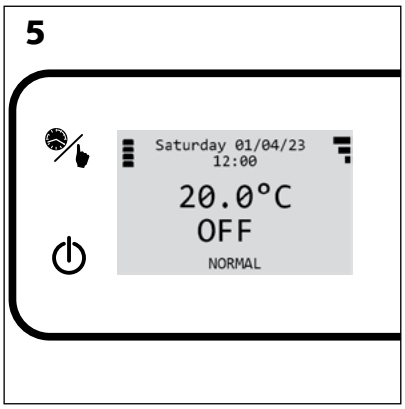

⚠ **The diagnostics and wired settings display specific to Stûv is needed for the next step.**

> Connect the display to the socket located behind the bottom cover [figure 1].

> Enter the "technical parameters" menu by pressing and holding simultaneously the ⊕ and ⊖

> Use code 3891 - Enter the desired number using the ⊕ and ⊖ buttons - Move to the next digit by briefly pressing ☰ - Confirm the combination by pressing and holding the ☰ button.

> Enter the "Flow calibration" menu using the ☰ [figure 2].
⚠ **Please note that the device must be switched off for at least 2 hours to do this!**

> In the smoke calibration screen, press ⊕ and ⊖ [figure 4].

> From this point on, the unit will reconfigure the temperature sensor. Wait until the remote control displays the home screen. Once it does, the operation is complete [Figure 5].

Filling the pellet hopper

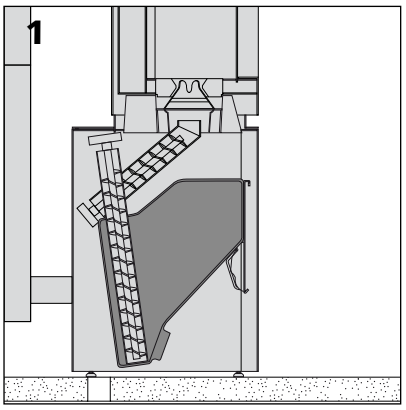

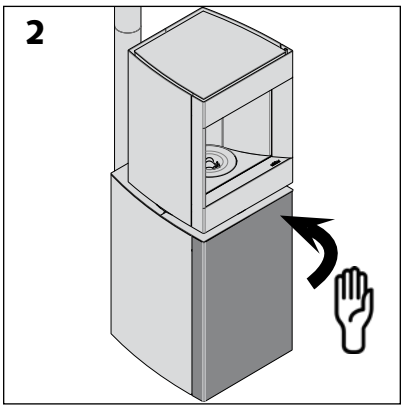

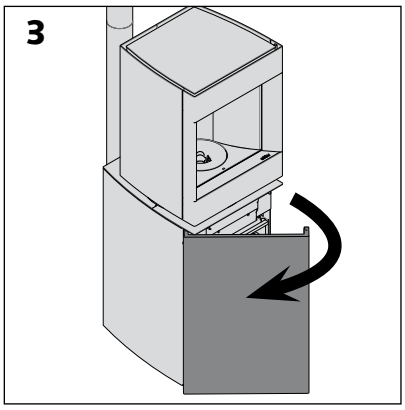

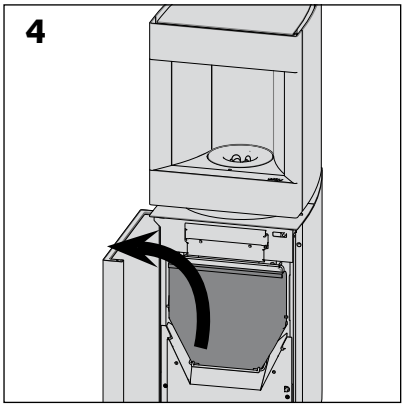

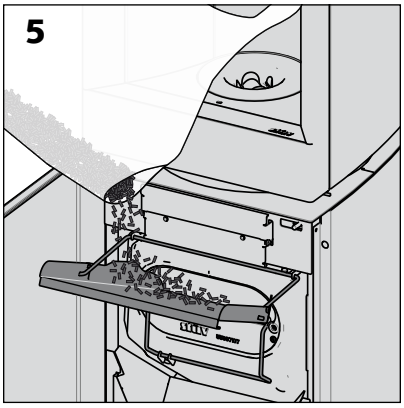

> In order to open the door on the sheet metal version, push towards the stove. It is opened via a "Push/Open" button. The door on the version in wood/trim opens normally.

Caution!
Before filling the hopper, make sure there are no unwanted objects inside. Do not attempt to burn wet pellets. Do not pour in dust or pellet pieces that are too small.

Checks before the first lighting of the appliance

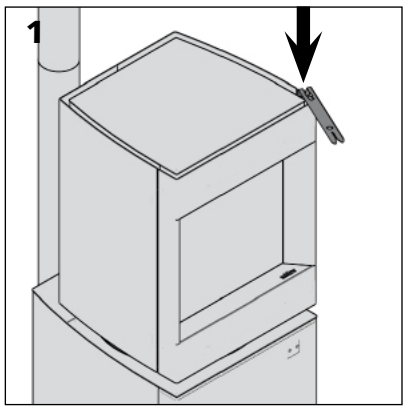

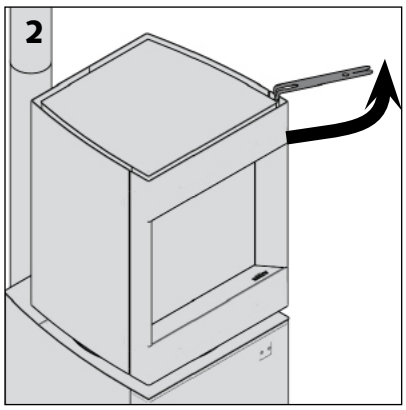

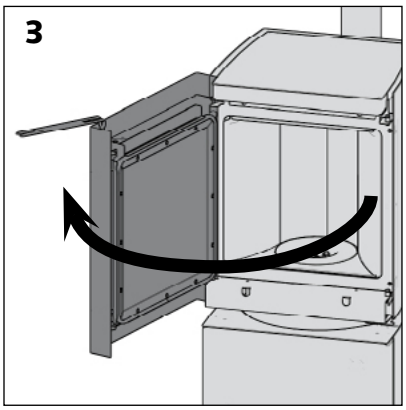

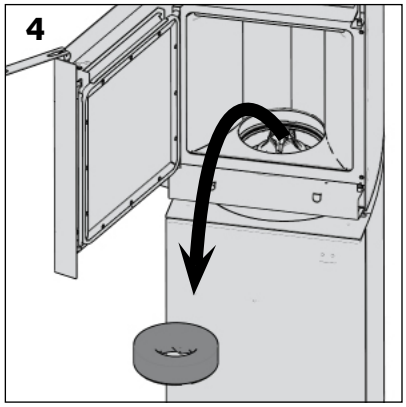

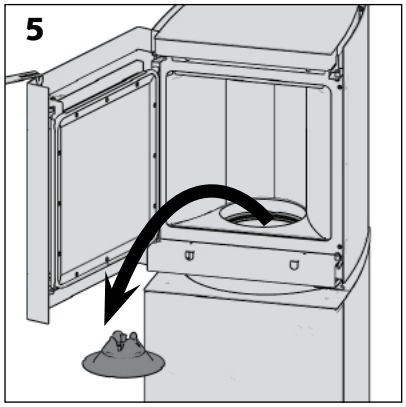

NOTE:
Each stove is factory tested. The presence of pellets in the screws is normal. It is important to make a visual check of the grilles before lighting.

> Open the combustion chamber door [diagrams 1, 2 and 3].

> Remove the vermiculite ring [diagram 4].

> Remove the flame modeller [diagram 5].

> Look to see that the grille is positioned correctly [diagrams 6 & 7].

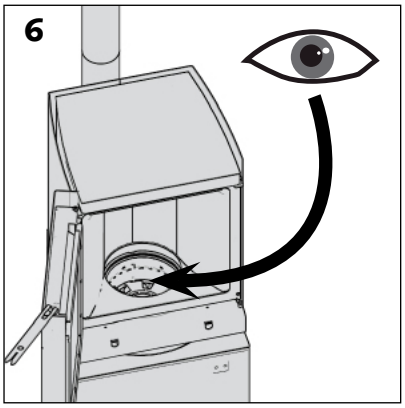

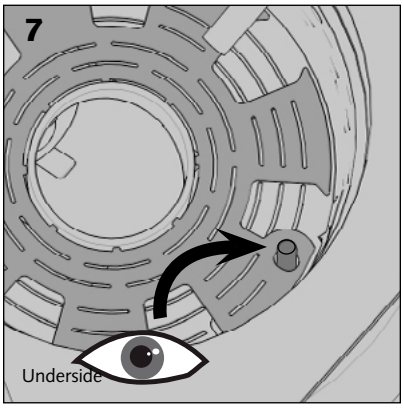

> Check that the ashpan grille moves correctly by handling the ash removal control [diagrams 8, 9 et 10].

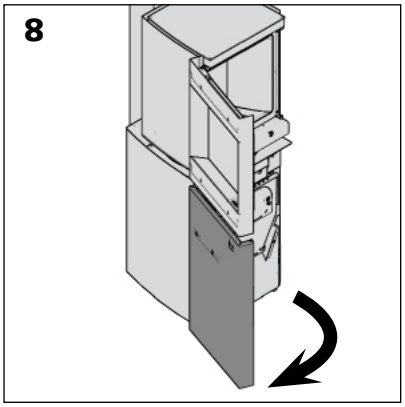

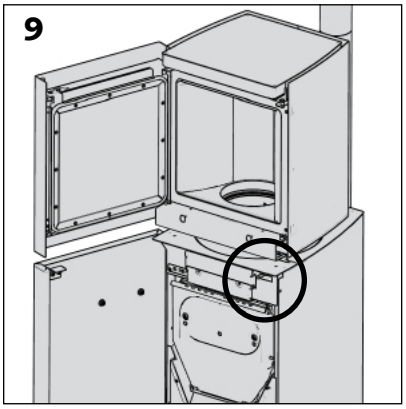

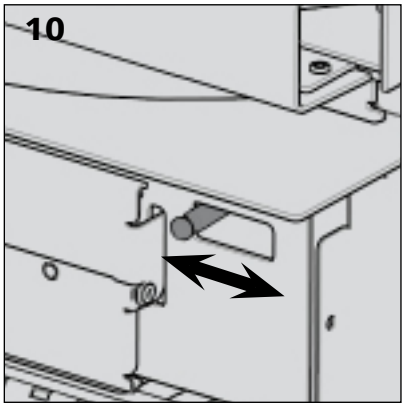

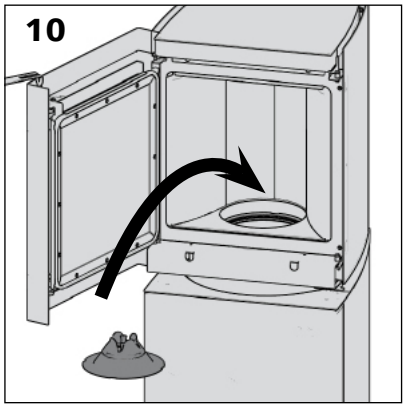

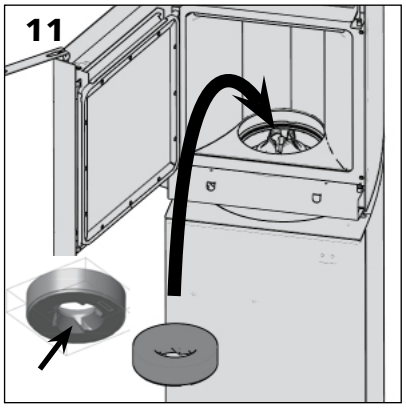

> Reposition the various parts correctly.

> Check that the ashpan, the hopper hatch and the door of the combustion chamber are securely locked before lighting.

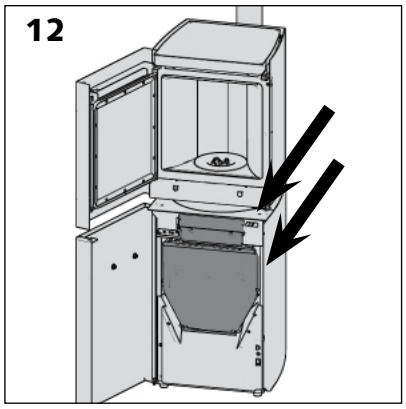

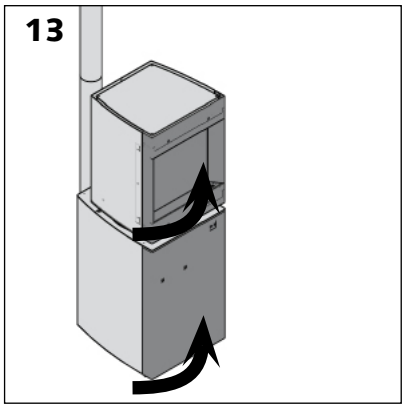

SCD ignition

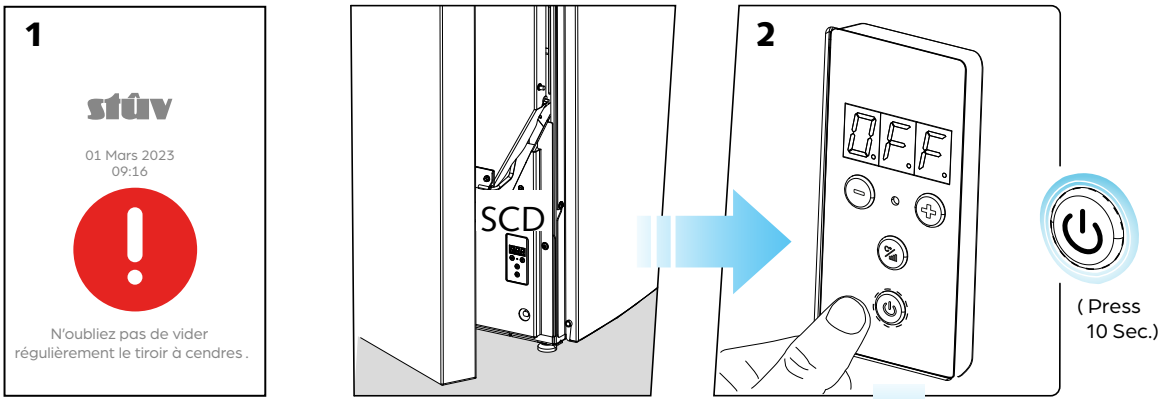

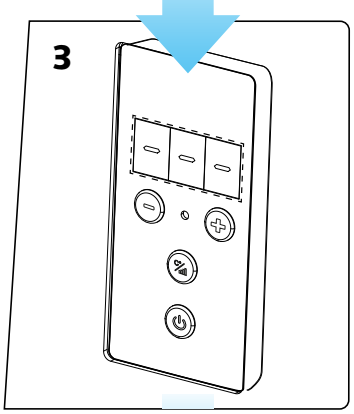

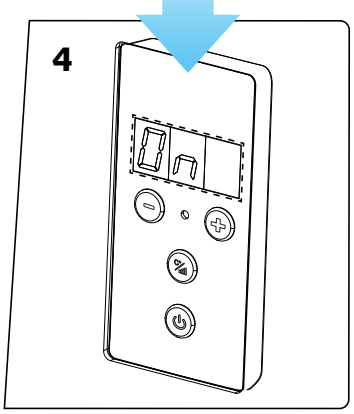

1 **Start by removing the ash from the device.**

2 **Press the SCD button** ⏻ **for 10 seconds** to switch on the Stûv P-10.

The device will review its different sensors.

3 The stove will then start loading.

4 Once there are enough pellets, the lighting process begins. The flame will then appear (10 - 12 minutes).

The lighting stages are complete as soon as the power level or setpoint temperature are displayed on the screen (20 - 25 minutes).

Once the appliance is lit...

We advise you to let the appliance run a few minutes in order to check that it is functioning correctly (no alarm signal, good flame, etc.)

For more details on the operation of the appliance, please refer to the user manual supplied in addition to these installation instructions.

For any questions or comments, please do not hesitate to contact our customer service department via email: info@stuv.

ACCEPTANCE OF WORKS

THIS DOCUMENT CERTIFIES ACCEPTANCE OF THE WORK . THIS FORM IS TO BE COMPLETED BY THE INSTALLER IN 2 COPIES, 1 FOR THE INSTALLER, 1 FOR THE USER.

THE PURCHASER

SURNAME .....
FIRST NAME .....
ADDRESS WHERE WORKS WERE CARRIED OUT .....
POST CODE .....
TOWN/PLACE .....
COUNTRY .....
EMAIL ADDRESS .....
TELEPHONE NUMBER .....

INSTALLATION ENGINEER

COMPANY .....
EMAIL ADDRESS .....
TELEPHONE NUMBER .....

YOUR STÛV STOVE 30-IN

SERIAL N° .....
DATE OF INSTALLATION .....

FLUE CHARACTERISTICS

HEIGHT OF FLUE IN M .....
DIAMETER OF FLUE IN MM .....
TYPE OF FLUE .....

CHECK OF SYSTEM'S SETTINGS

CHECK ON THE VACUITY OF THE FLUE .....
VALIDATION OF DRAUGHT .....
PELLET QUALITY CHECK .....
COMMENTS .....
.....
.....

SAFETY GUIDELINES

The use of this system has to comply with the installer's recommendations and the manufacturer's instructions which are set out in the directions for use issued to the customer with the invoice and this confirmation of acceptance.

The performance and the longevity of the appliance are directly linked to the quality of the pellets used.

THE INSTALLATION ENGINEER (name written out in full and signature).....

THE CUSTOMER (name written out in full and signature) .....

☐ INSTRUCTIONS AND ADVICE ON LIGHTING, USE AND MAINTENANCE PROVIDED TO THE USER.

Stûv stoves are designed and manufactured in Belgium by:

Stûv sa
rue Jules Borbouse 4
B-5170 Bois-de-Villers (Belgium)
info@stuv.com – www.stuv.com

Importer for Finland

Ilkka Alatarvas OY
Pikkujärventie 4B
01680 Vantaa
T 400 872 858
www.takkamaailma.com

Importer for Sweden

Eldoform Sverige AB
Slipgatan 2 – 117 39 Stockholm
T 0707 883 53 – www.eldoform.se

Importer for Denmark

Stove APS
Aldershvilevej 84 – 2880 Bagsvaerd
T 51 33 10 93

Importer for Estonia

Tulering Kaminasalong Oü
Sopruse 145 – 13417 Tallinn
T +372 56 249 004 - www.tulering.ee

Stûv reserves the right to make changes without prior notice.
These instructions have been produced with the greatest of care. However, we do not accept responsibility for any errors that may have been made.
Editor: Gérard Pitance – rue Jules Borbouse 4 – 5170 Bois-de-Villers – Belgium

[nl] [de] [it] [es] [pt] [cz] [en] [fr] >
This document is available in several languages:
Contact your distributor or visit www.stuv.com